LIFT STATION #82 REHABILITATION

PREPARED FOR
LOXAHATCHEE RIVER DISTRICT

PALM BEACH COUNTY, FLORIDA

SECTION 6, TOWNSHIP 41S, RANGE 43E

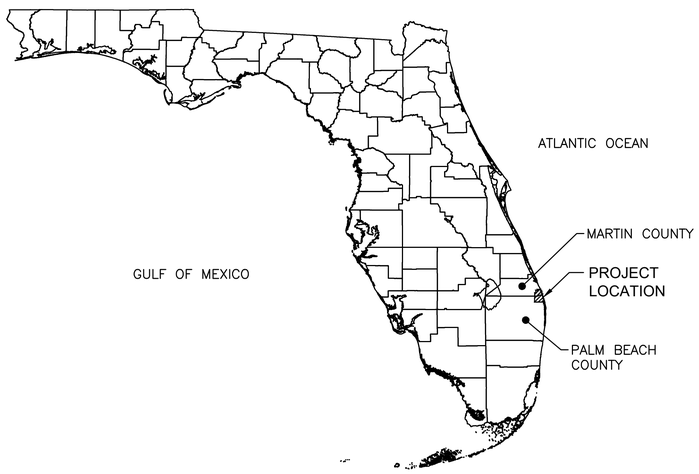

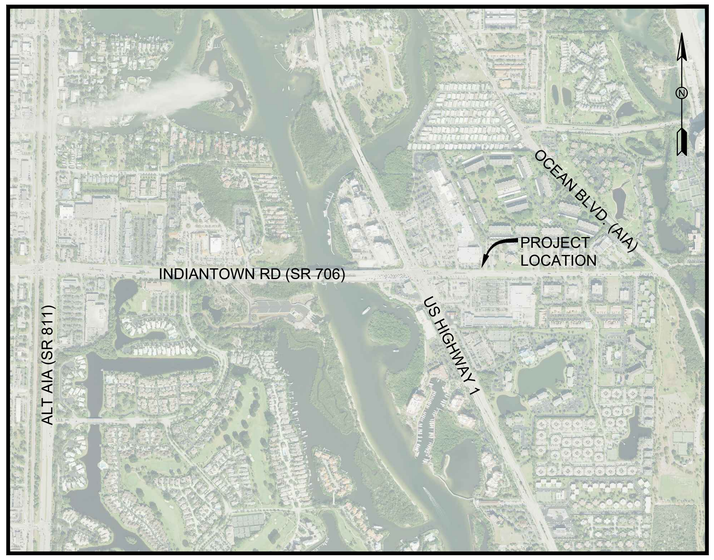

VICINITY MAP

NTS

SHEET INDEX

SHEET No.	SHEET TITLE
G-1	COVER
G-2	GENERAL NOTES AND LEGEND
P-1	LIFT STATION EXISTING SITE PLAN AND DEMOLITION PLAN SHEET
P-2	LIFT STATION PROPOSED SITE PLAN AND SECTION VIEW SHEET
D-1	DETAILS SHEET 1
D-2	DETAILS SHEET 2
E-1	ELECTRICAL NOTES & LEGENDS
E-2	ELECTRICAL DEMO PLAN
E-3	ELECTRICAL INSTALL PLAN
E-4	ELECTRICAL ONELINE DIAGRAM
E-5	LIFT STATION CONTROL PANEL & VFD ENCLOSURE DETAILS
E-6	CONTROL PANEL SCHEMATICS, SHEET 1
E-7	CONTROL PANEL SCHEMATICS, SHEET 2
E-8	ELECTRICAL DETAILS
E-9	ELECTRICAL DETAILS
I-1	I&C LEGEND
I-2	I&C DIAGRAM
I-3	VFD SCHEMATIC
I-4	STANDARD LOOP DIAGRAM
I-5	I&C DETAILS

LOXAHATCHEE RIVER ENVIRONMENTAL CONTROL DISTRICT 1971

LOXAHATCHEE RIVER
DISTRICT GOVERNING BOARD

CHAIRMAN	STEPHEN B. ROCKOFF
VICE CHAIRMAN	GORDON M. BOGGIE
TREASURER	HARVEY M. SILVERMAN
SECRETARY	JAMES D. SNYDER
ASST. SEC'Y/TREAS.	DR. MATT ROSTOCK

OCTOBER 2020

HOLTZ CONSULTING ENGINEERS, INC.
HCE
270 SOUTH CENTRAL BLVD., SUITE 207
JUPITER, FLORIDA 33458
PH. (561) 575-2005
Cert. No. 26960

CHRISTINE J. MIRANDA, P.E.
License No: 60906

G-1

LIFT STATION #82 REHABILITATION

Drawing Name: I:\PROJECTS\LRD\Lift Station 82 Improvements\Design\DRAWINGS\COVER.dwg Layout Name: G-1 – Plotted by: Russell Ryan – Date: 10/13/2020 – 1:38 PM – Holtz Consulting Engineers

GENERAL ABBREVIATIONS

ABND	Abandon or Abandoned
ACP	Asbestos Cement Pipe
ADD'L	Additional
AL, Alum	Aluminum
APPROX	Approximate
ARV	Air Release Valve
ASP, Asph	Asphalt
BFP	Backflow Preventer
BFV	Butterfly Valve
B/L	Base Line
BLDG	Building
BM	Benchmark
BO	Blowoff
BOP	Bottom of Pipe
CATV	Cable Television
CB	Catch Basin
CO	Cleanout
CL	Center Line
CLF	Chain Link Fence
CIP	Cast Iron Pipe / Cast in Place
CMP	Corrugated Metal Pipe
CONC	Concrete
CONST	Construct/Construction
DE	Drainage Easement
DI	Ductile Iron
DIP	Ductile Iron Pipe
DIA	Diameter
DR	Dimensional Ratio/Drainage
DWY	Driveway
EL	Elevation
EOP	Edge of Pavement
ESMT	Easement
EOW	Edge of Water
EX, EXIST	Existing
FDOT	Florida Department of Transportation
FH	Fire Hydrant
FM	Force Main
FND	Found
FNPT	Female Nominal Pipe Thread
FPL	Florida Power and Light
FW	Finished Water
GPS	Global Positioning System
GV	Gate Valve
HB	Hose Bibb
HDD	Horizontal Directional Drill
HDPE	High Density Polyethylene
HYD	Hydrant
ID	Identification
INV	Invert/Invert Elevation
IRC	Iron Rod & Cap
IRR	Irrigation
LAE	Limited Access Easement
LF	Linear Feet
LP	Light Pole
LS	Lift Station
LSA	Landscape Area
MAX	Maximum
MB	Mailbox
MECH	Mechanical
MH	Manhole
MIN	Minimum
MISC	Miscellaneous
MJ	Mechanical Joint
N/D	Nail and Disk
No	Number
NTS	Not to Scale
OC,O/C	On Center
OD	Outside Diameter
OHW	Overhead Wire
ORB	Official Records Book
PB	Plat Book
PGL	Profile Grade Line
PVC	Polyvinyl Chloride/Polyvinyl Chloride Pipe
RC	Reinforced Concrete
RCP	Reinforced Concrete Pipe
RCW	Reclaimed Water
RED	Reducer
REINF	Reinforce/Reinforced
RJ	Restrained Joint
RWM	Raw Water Main
R/W,ROW	Right of Way
S=	Slope (FT/FT)/(Rise/Run)
SAN	Sanitary
SCH/SCHED	Schedule
SEC	Section
SF	Silt Fence
SP	Sample Point
SS	Sanitary Sewer
STA	Station
TBM	Temporary Benchmark
TEMP	Temporary
TOB	Top of Bank
TON	Top of Nut
TOP	Top of Pipe
TOS	Toe of Slope
TYP	Typical
UE	Utility Easement
UEC	Underground Electric Conduit
UGE	Underground Electric
UGT	Underground Telephone
UNK	Unknown
W/	With (Combined Form)
WF	Wood Fence
WM	Water Main or Water Meter
WPB	Wire Pullbox
WTP	Water Treatment Plant
WV	Water Valve
WWTP	Waste Water Treatment Plant

SURVEY ABBREVIATIONS & LEGEND

(C) = CALCULATED
C.B.S. = CONCRETE BLOCK STRUCTURE
C.M.B. = COMMISSIONERS' MINUTES BOOK
CMH = CONFLICT MANHOLE
D.B. = DEED BOOK
I.P. = IRON PIPE
I.R. = IRON ROD
LB = LICENSE BUSINESS
(M) = MEASURED
M.H.W. = MEAN HIGH WATER
MON. = MONUMENT
(P) = PLAT
P.R.M. = PERMANENT REFERENCE MONUMENT
R.P.B. = ROAD PLAT BOOK
(S) = SURVEY
SLP = STOP LIGHT POLE
SMH = SANITARY MANHOLE
SBTMH = SOUTHERN BELL TELEPHONE MANHOLE
STMH = STORM MANHOLE
TB = TRAFFIC BOX
TLP = TRAFFIC LIGHT POLE
TV = TELEVISION
WP = WOOD POLE
WUP = WOOD UTILITY POLE

=LIGHT POLE
=ELECTRIC BOX
=WATER METER
=WATER VALVE
=FIRE HYDRANT
=IRRIGATION CONTROL VALVE
=TELEPHONE
=CABLE TV
=SANITARY MANHOLE
=BENCHMARK
=SIGN
=CONCRETE POWER POLE

LINETYPES

	EXISTING*	PROPOSED*
CABLE TV	CATV	
CENTER LINE		
DRAIN	DR DR	DR DR
EASEMENT		
ELECTRIC	E E	
FENCE	X X	X X
FIBER OPTIC	FOC FOC	FOC FOC
FIRE MAIN	FIRE FIRE	FIRE
FORCE MAIN	FM FM	FM FM
GAS	GAS GAS	
GUARDRAIL		
IRRIGATION	IRR IRR	
OVERHEAD UTILITIES	OHU OHU	
RAILROAD TRACK		
RAW WATER MAIN	RWM	RWM
RECLAIMED WATER MAIN	RCW RCW	RCW
RIGHT-OF-WAY		
SANITARY SEWER	S S	S S
SANITARY SEWER SERVICE	SS SS	SS SS
SILT FENCE		SF SF
STORM DRAINAGE	ST ST	ST ST
TELEPHONE	T T	
TOP OF BANK		
TOE OF SLOPE		
TRAFFIC SIGNAL	TS TS	TS TS
TURBIDITY BARRIER		TB TB
UNKNOWN	UNK UNK	
VACUUM SEWER	VS VS	VS VS
WATER MAIN	WM WM	WM WM
WATER SERVICE	WS WS	WS WS
WOOD FENCE	WF WF	WF WF

* DEPICTS ABOVE GRADE — TEXT — TEXT — TEXT —
* DEPICTS BELOW GRADE — TEXT — TEXT — TEXT — TEXT —

PIPING SYMBOLOGY

CONCENTRIC REDUCER
ECCENTRIC REDUCER
UNION
BALL VALVE (BV)
GATE VALVE (GV)
BUTTERFLY VALVE (BFV)/ ODOR CONTROL DAMPENER
PLUG VALVE (PV)
CHECK VALVE (CV)
PLUG/CAP
CO
CLEAN OUT
TAPPING VALVE
LINE STOP
HOSE BIBB
EXISTING PIPE
EXISTING BURIED PIPE
PROPOSED PIPE
PROPOSED PIPE
MECHANICAL JOINT
FLANGE JOINT
FLEXIBLE COUPLING
FLEXIBLE COUPLING WITH THRUST TIES
ELBOW UP
ELBOW DOWN
90° ELBOW
TEE UP
TEE DOWN
TEE
CROSS

CIVIL SYMBOLOGY

CONSTRUCTION BASE LINE 0+00
DIRECTION OF FLOW
EXIST. SPOT ELEVATION x 79.5
PROP. SPOT ELEVATION 0.0
BENCHMARK EL. 20.90
NEW CONTOUR ELEV. 79.5
EXIST. UTILITY POLES UTILITY POWER TELEPHONE LIGHT
NEW UTILITY POLES UTILITY POWER TELEPHONE LIGHT
PIPING CONFLICT LOCATION C-1
SAMPLE POINT SP1
WATER SURFACE PLAN SECTION EL.48.00
FIRE HYDRANT NEW EXIST.
EXIST. MANHOLE, DRAINAGE STRUCTURE
NEW MANHOLE, DRAINAGE STRUCTURE
TO BE REMOVED/DEMOLISHED

SECTION/DETAIL SYMBOL

SECTION 5 / 15
SCALE:
SECTION LETTER/DETAIL NUMBER
SHEET/DRAWING NO. ON WHICH SECTION/DETAIL IS SHOWN

1 / 101
SECTION LETTER/DETAIL NUMBER
SHEET/DRAWING NO. ON WHICH SECTION/DETAIL IS SHOWN

SECTION CUT
A A

SECTION CUT ON DETAILS

PIPE DESIGNATION 8" DIP FORCE MAIN
NOMINAL PIPE DIA.(IN.)
PIPE MATERIAL (IF SHOWN)
FLOW STREAM IDENTIFICATION (IF SHOWN)

Symbols:

#	Pounds/Number
∢	Angle
Ø	Round/Diameter

NOTE:
ELEVATIONS SHOWN ARE BASED ON NORTH AMERICAN VERTICAL DATUM OF 1988 (N.A.V.D. 88). TO CONVERT FROM NORTH AMERICAN VERTICAL DATUM OF 1988 (N.A.V.D. 88) TO NATIONAL GEODETIC VERTICAL DATUM OF 1929 (N.G.V.D. 29) ADD 1.51 FEET.

811 Know what's below. Call before you dig.

Drawing Name: F:\PROJECTS\LRD\Lift Station 82 Improvements\Design\DRAWINGS\LEGEND.dwg Layout Name: LEGEND – Plotted by: Russell Ryan – Date: 10/13/2020 – 1:38 PM – Holtz Consulting Engineers

DATE	BY	REVISIONS

Date: 10/13/2020
Scale: AS NOTED
Design By: CM
Drawn By: RR
Check By: DH

LOXAHATCHEE RIVER DISTRICT
LIFT STATION #82 REHABILITATION

GENERAL NOTES AND LEGEND

HOLTZ CONSULTING ENGINEERS, INC.
270 SOUTH CENTRAL BLVD., SUITE 207
JUPITER, FLORIDA 33458
PH. (561) 575-2005
Cert. No. 26960
CHRISTINE J. MIRANDA, P.E.
License No: 60906

G-2

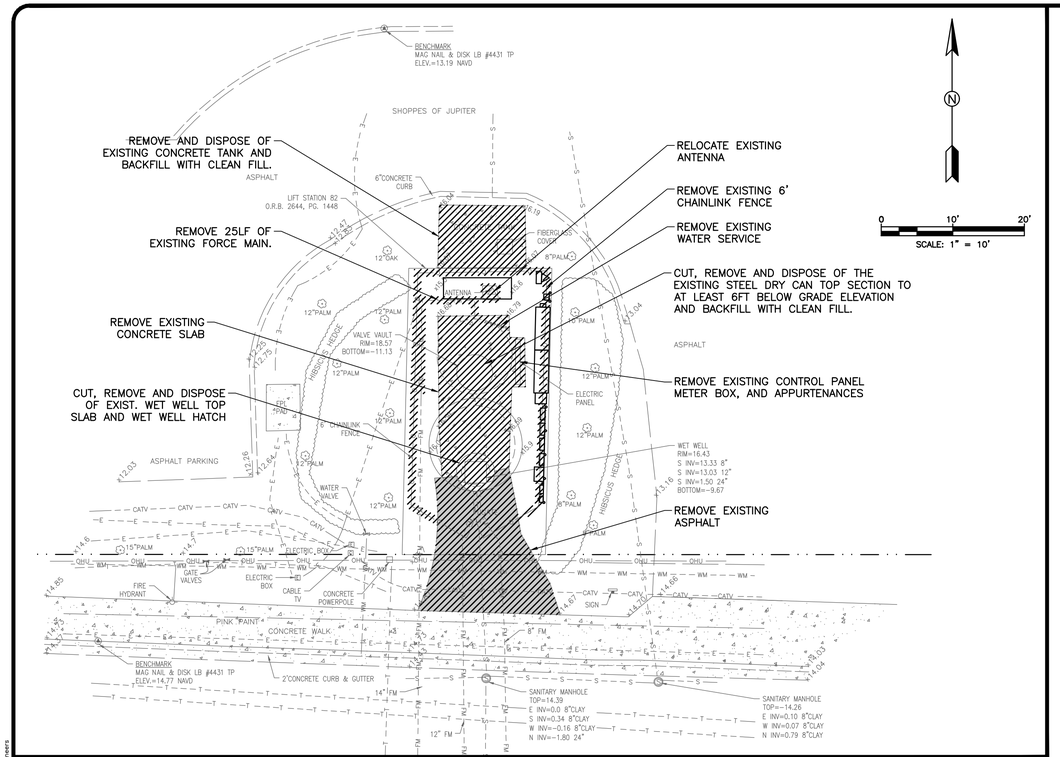

SITE PLAN

NOTES:

1. CONTRACTOR TO LOCATE EXISTING FORCE MAINS PRIOR TO BEGINNING WORK TO CONFIRM TIE–IN LOCATION.
2. TEMPORARY BYPASS PUMPING SHALL BE IN OPERATION FOR 24 HOURS/DAY FOR A MINIMUM OF 3 FULL DAYS WITHOUT ANY PROBLEMS AT ALL BEFORE LS #82 CAN BE TAKEN OUT OF SERVICE. IF THERE IS A PROBLEM WITH THE BYPASS PUMPING SYSTEM THEN THE FLOW SHOULD BE RE–DIRECTED INTO THE OPERATING WET WELL AND THE PROBLEM SHOULD BE RECTIFIED. IF THERE ARE NO PROBLEMS FOR 3 CONSECUTIVE DAYS THEN THE OWNER/ENGINEER WILL PROVIDE WRITTEN AUTHORIZATION TO TAKE THE LIFT STATION OUT OF SERVICE. AT LEAST ONE BACK–UP BYPASS PUMP OF THE SAME CAPACITY AS THE MAIN BYPASS PUMP SHALL BE ON SITE FOR THE ENTIRE DURATION OF THE BYPASS PUMPING OPERATION. BYPASS SYSTEM SHALL NOT BE UTILIZED UNTIL ALL EQUIPMENT AND MATERIALS REQUIRED TO MADE THE MODIFICATIONS TO THE LIFT STATION ARE ON–SITE AND READY FOR INSTALLATION, IN ORDER TO MINIMIZE BYPASS PUMPING OPERATION. BYAPSS PUMP REQUIREMENTS: 1750 GPM @ 80' TDH. SEE APPENDIX C SYSTEM SHUTDOWNS AND BYPASS FOR SYSTEM AND OPERATING DETAILS AND CONTRACTOR BYPASS PLAN SUBMITTAL REQUIREMENTS.
3. CONTRACTOR SHALL PROTECT ALL VEGETATION AND PRIVATE PROPERTY, UNLESS NOTED OTHERWISE. THE CONTRACTOR SHALL RESTORE OR REPLACE ANY DAMAGED PROPERTY AT NO COST TO THE OWNER.

NOTE:
ALL ELEVATIONS SHOWN ARE VERTICAL DATUM NAVD 88. TO CONVERT FROM NAVD 88 TO NGVD 29 DATUM ADD 1.51 FEET TO THE NAVD 88 ELEVATION.

EXAMPLE: EL.= 0.00' (NAVD 88)
EL.= 1.51' (NGVD 29)

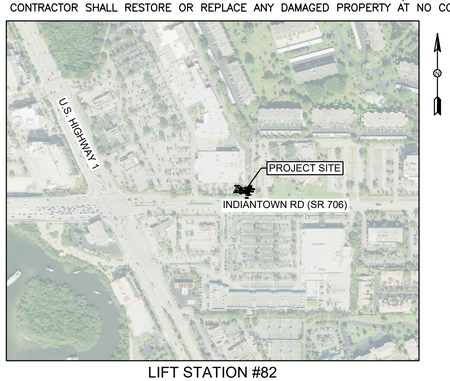

LIFT STATION #82
SECTION 6, TOWNSHIP 41S, RANGE 43E
LATITUDE 26° 56' 2.87" N, LONGITUDE 80° 04' 43.17" W
PCN# 30434106000040015

SITE PHOTO
LOOKING NORTH

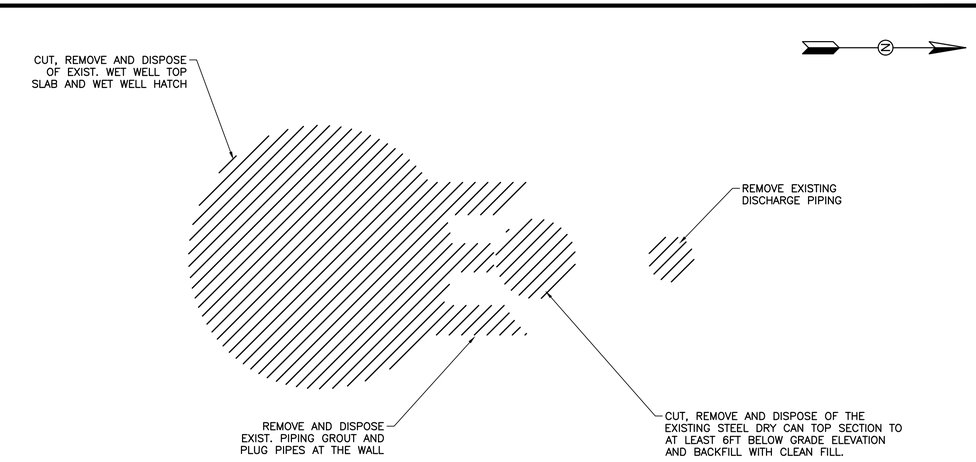

PLAN VIEW
NOT TO SCALE

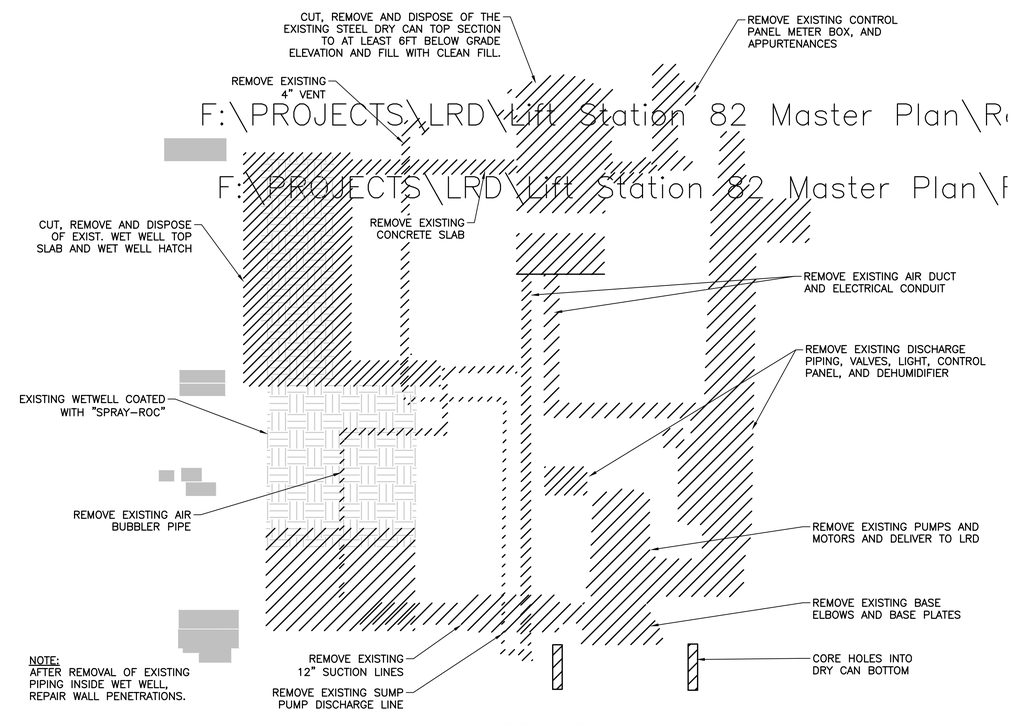

NOTE:
AFTER REMOVAL OF EXISTING PIPING INSIDE WET WELL, REPAIR WALL PENETRATIONS.

NOTE: SECTION VIEW IS PARALLEL TO DISCHARGE PIPING

SECTION VIEW
NOT TO SCALE

DATE	BY	REVISIONS

Date: 10/13/2020
Scale: AS NOTED
Design By: CM
Drawn By: RR
Check By: DH

LOXAHATCHEE RIVER DISTRICT
LIFT STATION #82 REHABILITATION

LIFT STATION EXISTING SITE PLAN AND DEMOLITION PLAN SHEET

HOLTZ CONSULTING ENGINEERS, INC.
270 SOUTH CENTRAL BLVD., SUITE 207
JUPITER, FLORIDA 33458
PH. (561) 575-2005
Cert. No. 26960

CHRISTINE J. MIRANDA, P.E.
License No: 60906

P-1

Drawing Name: F:\PROJECTS\LRD\Lift Station 82 Improvements\Design\DRAWINGS\PLAN SHEET.dwg Layout Name: P-1 – Plotted by: Russell Ryan – Date: 10/13/2020 – 1:19 PM – Holtz Consulting Engineers

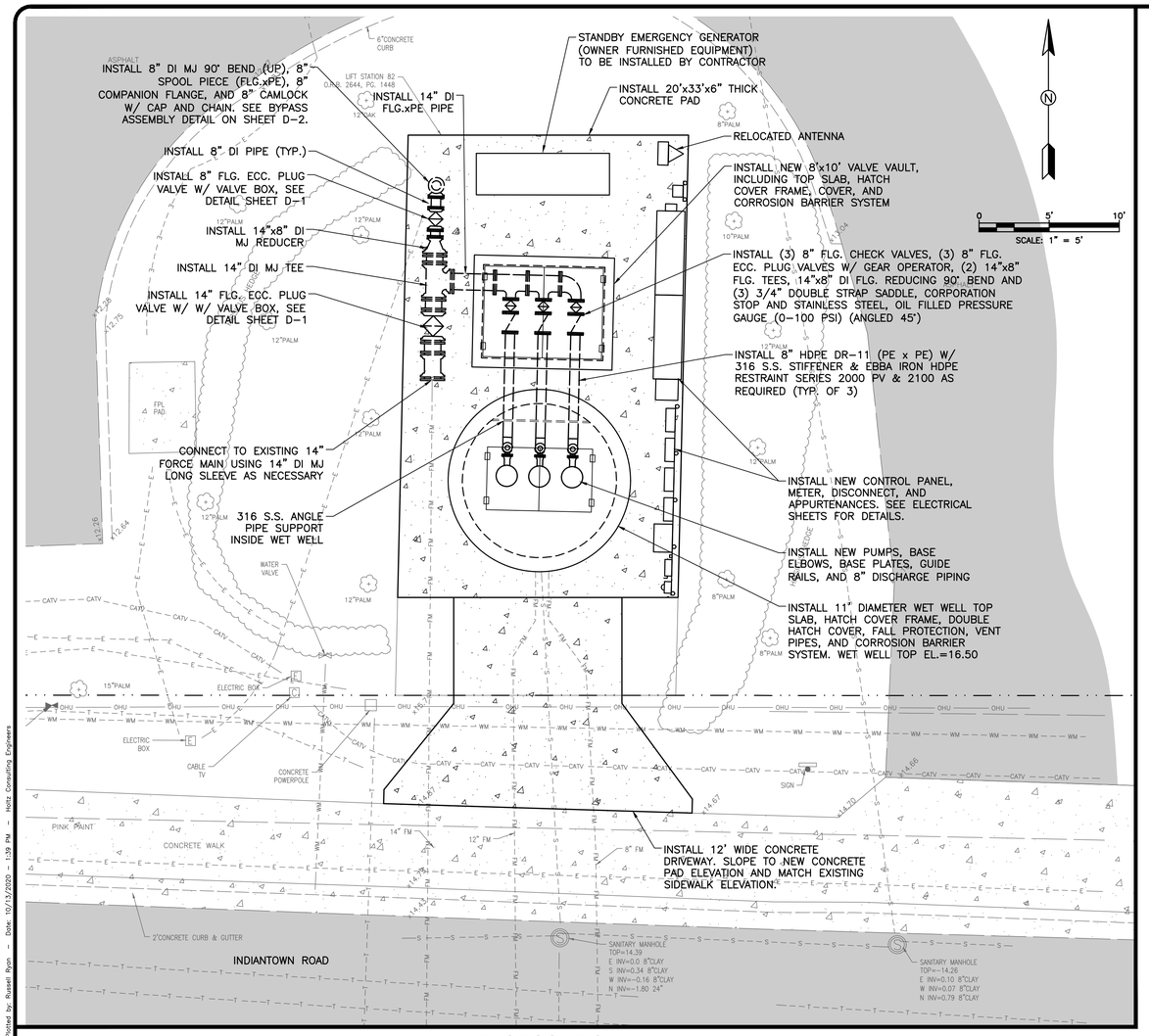

PROPOSED SITE PLAN

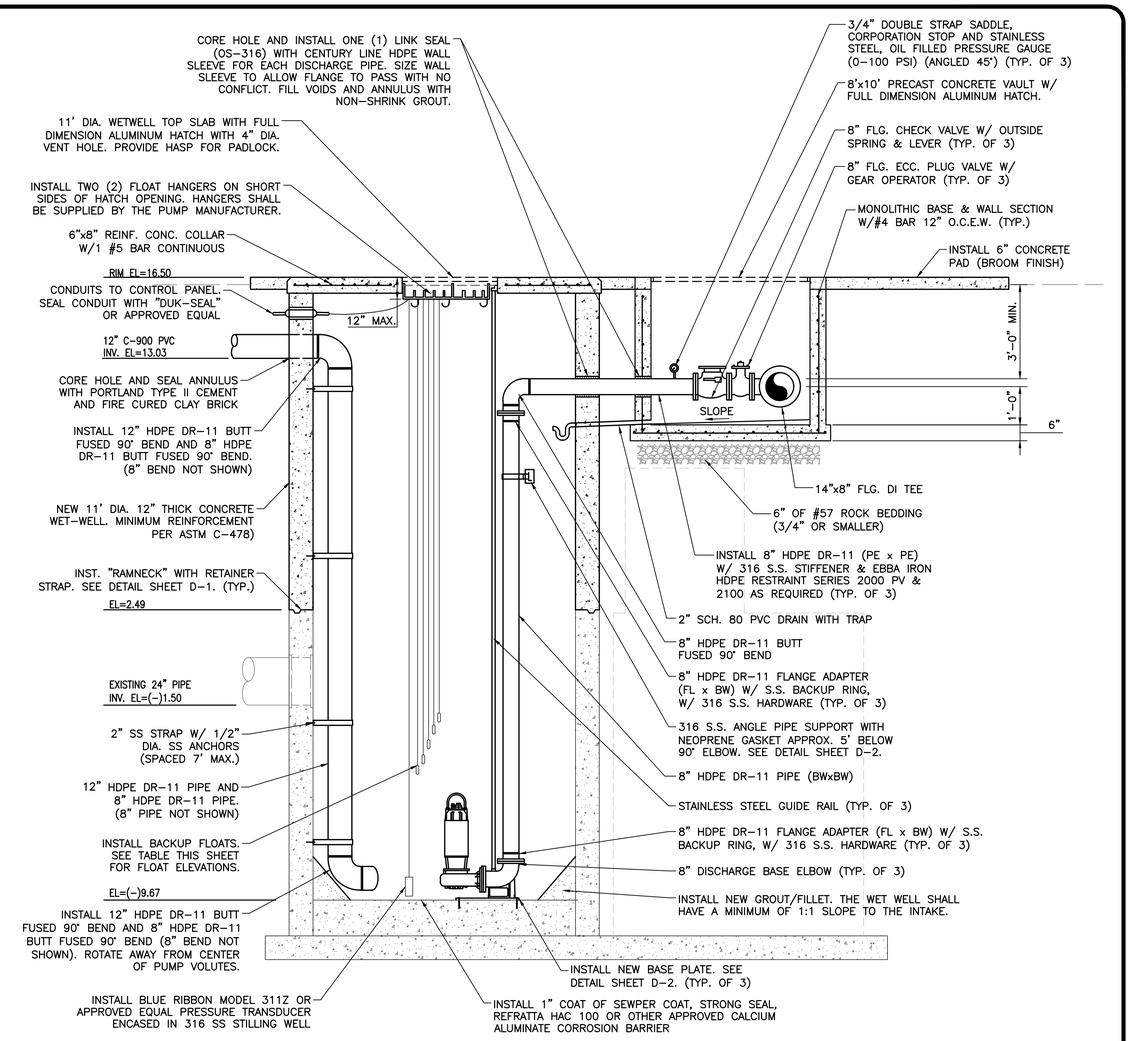

NOTE: SECTION VIEW IS THRU CENTER OF WET WELL PARALLEL TO DISCHARGE PIPING

PROPOSED SECTION VIEW

NOTES:
1. REFER TO DETAIL SHEETS FOR ADDITIONAL INFORMATION AND REQUIREMENTS.
2. CONTRACTOR SHALL RESTRAIN EXISTING FORCE MAIN AS NECESSARY PRIOR TO PERFORMING TIE-IN.
3. NEW PUMP GUIDE RAILS, BASE ELBOWS, AND APPURTENANCES SHALL BE COMPATIBLE WITH NEW PUMP.
4. PROVIDE 36" MINIMUM COVER FROM FINISHED GRADE TO TOP OF FORCE MAIN.
5. CONTRACTOR SHALL PROTECT ALL VEGETATION AND PRIVATE PROPERTY, UNLESS NOTED OTHERWISE. THE CONTRACTOR SHALL RESTORE OR REPLACE ANY DAMAGED PROPERTY AT NO COST TO THE OWNER.

PUMP DATA

MANUFACTURER: XYLEM SEWAGE PUMP
MODEL: NP3202 SERIES: MT 3~640 8"
MOTORS: 60 HP, 460 VOLT, WIRE, 60 HZ.
PUMPS DELIVERING 1500 (Design) G.P.M. AT 72' (Design) FT. T.D.H.
PUMPS DELIVERING (Asbuilt) G.P.M. AT (Asbuilt) FT. T.D.H.

ELEVATION SCHEDULE	
HIGH LEVEL ALARM	
LAG PUMP ON	
LEAD PUMP ON	
PUMPS OFF	

DATE	BY	REVISIONS

Date: 10/13/2020
Scale: AS NOTED
Design By: CM
Drawn By: RR
Check By: DH

LOXAHATCHEE RIVER DISTRICT
LIFT STATION #82 REHABILITATION

LIFT STATION PROPOSED SITE PLAN AND SECTION VIEW SHEET

HOLTZ CONSULTING ENGINEERS, INC.
270 SOUTH CENTRAL BLVD., SUITE 207
JUPITER, FLORIDA 33458
PH. (561) 575-2005
Cert. No. 26960
CHRISTINE J. MIRANDA, P.E.
License No: 60906

P-2

Drawing Name: F:\PROJECTS\LRD\LIFT Station 82 Improvements\Design\DRAWINGS\PLAN SHEET.dwg Layout Name: P-2 - Plotted by: Russell Ryan - Date: 10/13/2020 - 1:39 PM - Holtz Consulting Engineers

MINIMUM LENGTH (FT) TO BE RESTRAINED ON EACH SIDE OF FITTING(S)										
TYPE	PIPE SIZE									
	4"	6"	8"	10"	12"	16"	20"	24"	30"	36"
90° BEND	18	24	31	38	43	55	65	75	88	100
45° BEND	8	10	13	15	18	23	26	31	38	43
22-1/2° BEND	4	5	6	8	9	11	13	15	18	20
11-1/4° BEND	2	3	4	5	6	8	9	10	11	13
PLUG OR BRANCH OF TEE	38	50	65	79	90	117	139	163	194	223
VALVE	19	25	32	40	45	59	70	82	98	112
REDUCER	VARIES BY SIZE; TO BE DETERMINED BY THE DESIGN ENGINEER									

NOTES:
1. FITTINGS SHALL HAVE RESTRAINED JOINTS UNLESS OTHERWISE INDICATED.
2. INSTALL FULL LENGTH JOINTS WITH TOTAL LENGTH EQUAL TO OR GREATER THAN LENGTH SHOWN IN THE TABLE.
3. WHERE TWO OR MORE FITTINGS ARE IN SERIES, SELECT FITTING RESTRAINT LENGTH THAT YIELDS THE LONGEST RESTRAINT DISTANCE.
4. ALL INLINE VALVES SHALL BE RESTRAINED.
5. WHERE INTERNAL RESTRAINED JOINTS ARE USED, THE ENTIRE BELL SHALL BE PAINTED RED.
6. LENGTHS SHOWN IN THE TABLE WERE CALCULATED IN ACCORDANCE WITH PROCEDURES OUTLINED IN "THRUST RESTRAINT DESIGN FOR DUCTILE IRON PIPE" GUIDELINES PUBLISHED BY DIPRA, USING THE ASSUMPTIONS SHOWN BELOW:

WORKING PRESSURE: 100 PSI
SOIL DESIGNATION: SM (SAND SILT)
LAYING CONDITIONS: 3
DEPTH OF COVER: 3 FT
SAFETY FACTOR: 1.5
CONVERSION FACTOR FOR PVC PIPE: 1.25

THE DESIGN ENGINEER SHALL INCREASE THE VALUES IN THE TABLE AS WARRANTED BY SITE-SPECIFIC PARAMETERS, SUCH AS SOIL DESIGNATIONS AND LAYING CONDITIONS.

LOXAHATCHEE RIVER DISTRICT

N.T.S.	FORCE MAIN THRUST RESTRAINT CHART	SD-18
REVISION: APRIL, 2012		

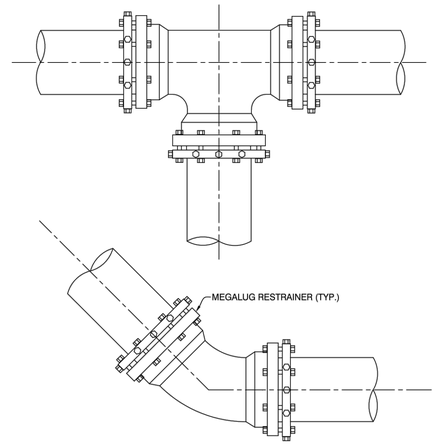

NOTES:
1. RETAINER GLANDS FOR PVC PIPE OR DUCTILE IRON PIPE SHALL BE USED AT BEND'S OR TEE'S; RETAINER GLANDS SHALL BE MANUFACTURED BY UNI-FLANGE CORP., OR "MEGALUG" BY EBAA IRON SALES INC., OR DISTRICT APPROVED EQUAL.
2. THE NUMBER OF JOINTS RESTRAINED EACH SIDE OF ANY FITTING OR VALVE SHALL BE IN ACCORDANCE WITH THE MANUFACTURER RECOMMENDATION.
3. ALL BEND'S & TEE'S SHALL HAVE AN EMS INSTALLED.

LOXAHATCHEE RIVER DISTRICT

N.T.S.	FORCE MAIN THRUST RESTRAINT DETAIL	SD-19
REVISION: APRIL, 2012		

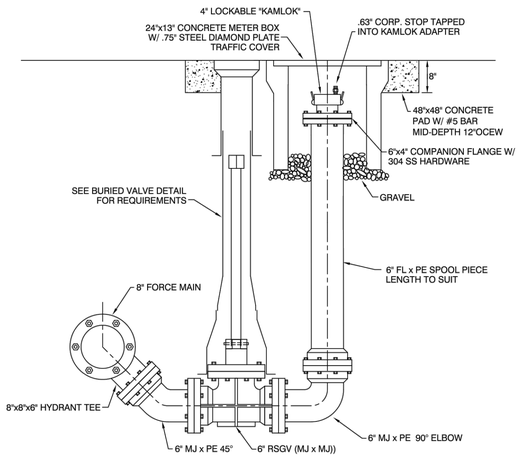

LOXAHATCHEE RIVER DISTRICT

N.T.S.	FORCE MAIN DRAIN DETAIL	SD-26
REVISION: JULY, 2019		

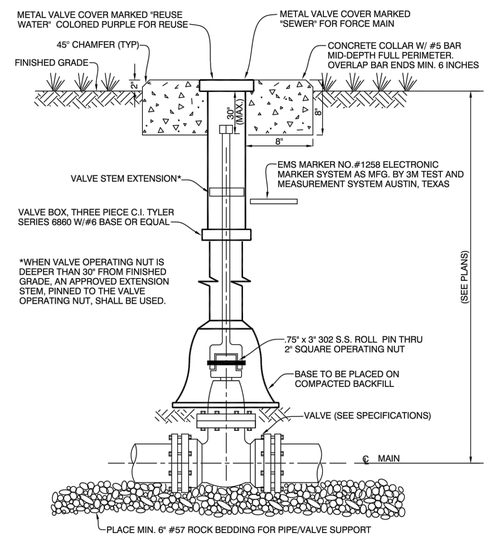

FORCE MAIN OR REUSE WATER SYSTEM

LOXAHATCHEE RIVER DISTRICT

N.T.S.	BURIED VALVE DETAIL	SD-27
REVISION: JULY, 2019		

Missing or invalid reference
File: F:\PROJECTS\LRD\DETAILS\2017 ConstrStds.pdf

Missing or invalid reference
File: F:\PROJECTS\LRD\DETAILS\2017 ConstrStds.pdf

DATE	BY	REVISIONS

Date: 10/13/2020
Scale: AS NOTED
Design By: CM
Drawn By: RR
Check By: DH

LOXAHATCHEE RIVER DISTRICT
LIFT STATION #82 REHABILITATION

DETAILS SHEET 1

HOLTZ CONSULTING ENGINEERS, INC.
270 SOUTH CENTRAL BLVD., SUITE 207
JUPITER, FLORIDA 33458
PH. (561) 575-2005
Cert. No. 26960

CHRISTINE J. MIRANDA, P.E.
License No: 60906

D-1

Drawing Name: F:\PROJECTS\LRD\Lift Station 82 Improvements\Design\DRAWINGS\DETAILS.dwg Layout Name: D-1 - Plotted by: Russell Ryan - Date: 10/13/2020 - 1:40 PM - Holtz Consulting Engineers

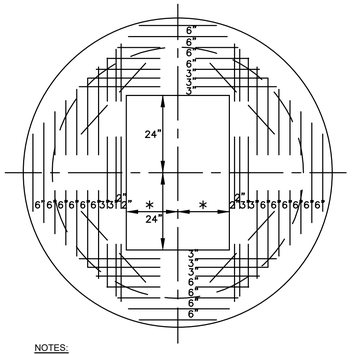

NOTES:

1. ALL BARS IN TOP SLAB TO BE #5 LOCATION OF OPENING IN TOP SLAB TO BE VERIFIED BY DESIGN ENGINEER WITH REQUIREMENT OF PUMP MANUFACTURER.

✱2. PER PUMP MANUFACTURER RECOMMENDATION.

TOP SLAB DETAIL

N.T.S.

SECTION A-A

N.T.S.

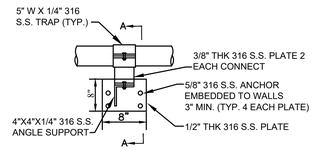

NOTES:

1. CONSTRUCT ALL WELDS IN ACCORDANCE WITH AWS D-1.6 STRUCTURAL WELDING CODE.

2. ALL NUTS & BOLTS SHALL BE 1/2" THK 316 S.S.

ANGLE PIPE SUPPORT DETAIL

N.T.S.

BASE PLATE: 316 STAINLESS STEEL 0.50" THICK
(ALL MEASUREMENTS IN INCHES)

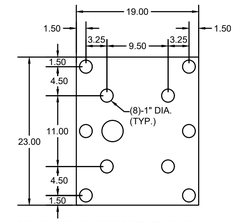

6"X6", 6"X8", 8"X8" ELBOWS

N.T.S.

NOTES:

1. EACH BASE ELBOW SHALL BE SECURED TO THE BOTTOM OF THE WET WELL WITH FOUR (4) 3/4" DIAMETER 316 S.S. THREADED RODS, 316 S.S. SELF LOCKING NUTS, AND 316 S.S. PLATE. THE PLATE SHALL BE SECURED WITH SIX (6) 1" DIAMETER 316 S.S. THREADED RODS. THE THREADED RODS SHALL BE EMBEDDED A MINIMUM OF 6" INTO THE CONCRETE AND THE MAXIMUM TIGHTENING TORQUE APPLIED IS 110 FT. LBS.

2. ANCHOR STUD HEIGHTS ABOVE THE GROUT RAMP SHOULD ALLOW FOR PLATE AND BASE ELBOW THICKNESS, WASHERS, DOUBLE SELF-LOCKING NUTS WITH VERY LITTLE EXTRA HEIGHT (I.E., 0.25: OR LESS)

3. EACH ANCHORING ROD SHALL HAVE TWO (2) SELF-LOCKING NUTS, AND A SINGLE WASHER. EACH PUMP BASE ELBOW SHALL UTILIZE 2"x2"x1/4" 316 SS FABRICATED WASHERS.

4. CONTRACTOR SHALL USE A QUICK SET, HIGH STRENGTH, NON-SHRINKING GROUT TO CREATE 1-INCH (MINIMUM) LIFT OFF OF EXISTING FLOOR (7000 PSI @ 24 HOURS). CONTRACTOR SHALL ENSURE EXISTING FLOOR IS CLEANED AND PREPARED TO MAXIMIZE BONDING OF GROUT. DRY PACKING NOT ALLOWED.

5. ALTERNATE BASE ELL STUDS. CONTRACTOR MAY PROVIDE (4) - 3/4" 316 SS THREADED RODS INSTALLED THROUGH 0.875" DIA. HOLES AND WELDED TO THE BOTTOM OF THE BASE PLATE TO ANCHOR THE BASE ELLS TO THE BASE PLATES.

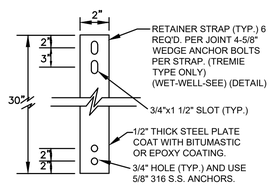

NOTE: ALL BOLTS/NUTS SHALL BE 316 S.S.

RETAINER STRAP DETAIL

N.T.S.

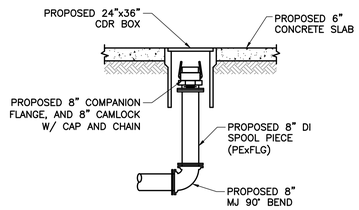

BYPASS ASSEMBLY DETAIL

N.T.S.

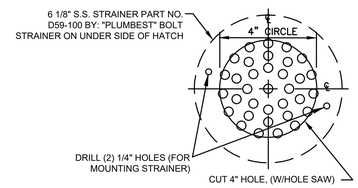

VENT HOLE DETAIL
WETWELL HATCH

N.T.S.

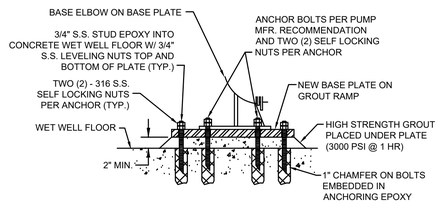

PUMP BASEPLATE SECTION DETAIL

N.T.S.

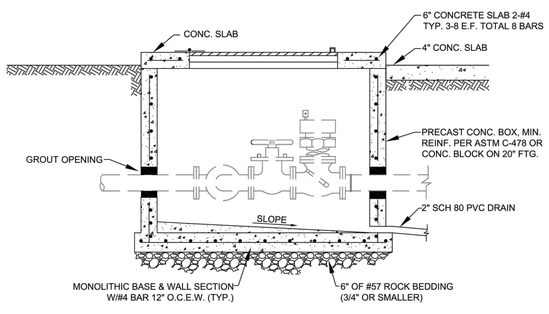

VALVE VAULT

N.T.S.

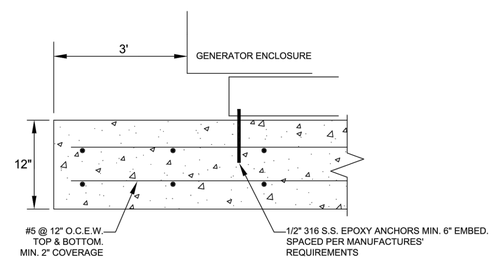

SECTION

GENERATOR SLAB DETAIL

NTS

NOTES:

1. COMPACT SOIL BENEATH SLAB TO 100% OF MAXIMUM DENSITY AS DETERMINED BY AASHTO T-180.
2. ALL SLABS TO BE 2" ABOVE GRADE EXCEPT WHERE SLABS MEET STABILIZED DRIVES. GRADES AT STABILIZED DRIVES SHALL BE FLUSH.

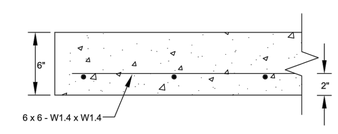

SECTION

CONCRETE PAD DETAIL

NTS

NOTES:

1. CONSTRUCTION JOINTS REQUIRED EVERY 100SF.
2. COMPACT SOIL BENEATH SLAB TO 100% OF MAXIMUM DENSITY AS DETERMINED BY AASHTO T-180.

DATE	BY	REVISIONS

Date: 10/13/2020
Scale: AS NOTED
Design By: CM
Drawn By: RR
Check By: DH

LOXAHATCHEE RIVER DISTRICT
LIFT STATION #82 REHABILITATION

DETAILS SHEET 2

HOLTZ CONSULTING ENGINEERS, INC.
270 SOUTH CENTRAL BLVD., SUITE 207
JUPITER, FLORIDA 33458
PH. (561) 575-2005
Cert. No. 26960

CHRISTINE J. MIRANDA, P.E.
License No: 60906

D-2

Drawing Name: F:\PROJECTS\LRD\LIft Station 82 Improvements\Design\DRAWINGS\DETAILS.dwg Layout Name: D-2 – Plotted by: Russell Ryan – Date: 10/13/2020 – 1:40 PM – Holtz Consulting Engineers

ELECTRICAL LEGEND

- RACEWAY EXPOSED
- LIGHTING RACEWAY CONCEALED
- RACEWAY CONCEALED
- RACEWAY TURNED UP/DOWN
- (5) MOTOR
- TRANSFORMER
- FUSE
- CIRCUIT BREAKER
- CAPACITOR
- LIGHTNING ARRESTER
- SAFETY DISCONNECT SWITCH, HP RATED
- GROUND
- DUPLEX, 14" AFF
- LEVEL SWITCH, FLOAT SWITCH
- THERMAL SWITCH
- HEATER
- (G) PILOT LIGHT
- RTM RUN TIME METER
- SELECTOR SWITCH
- PUSH BUTTON
- ON-OFF SWITCH
- NORMALLY OPEN CONTACT
- NORMALLY CLOSED CONTACT
- (J) JUNCTION BOX
- PANELBOARD, ELECTRICAL EQUIP. ENCL
- (M) MOTOR OPERATED VALVE
- RED, MAINTAINED PUSH BUTTON
- TIMING CONTACT
- CONTROL RELAY, MOTOR STARTER, ETC.
- (C01) DENOTES CONDUIT TAG 01
- (C01) (C02) DENOTES SEPARATE CONDUITS WITH SEPARATE WIRE
- (A-1) DENOTES PANELBOARD A, CIRCUIT 3

MATERIAL SCHEDULE

LOCATION	CONDUIT	MISC ENCLOSURE MATERIALS	MISC ENCLOSURE NEMA RATING	FASTENERS, STRUT, THREADED ROD, ETC.	REMARKS
INTERIOR					
EXPOSED	PVC SCHED. 80	316 SS	4X	316 SS	
EXTERIOR					
BELOW GRADE	PVC SCHED. 80	CONCRETE BOXES	N/A	316 SS	
BELOW GRADE	PVC SCHED. 80				TO WETWELL
ABOVE GRADE	ALUM.	316 SS	4X	316 SS	NOT TO WETWELL

GENERAL NOTES

1. THE SCHEDULE SHALL ESTABLISH THE MINIMUM LEVEL OF QUALITY FOR MATERIALS. UNLESS OTHERWISE INDICATED ON THE DRAWINGS OR IN THE SPECIFICATIONS
2. THE SCEHDULE SHALL NOT APPLY TO POWER TRANSFORMERS, LIGHT FIXTURES AND THE LIKE, THOSE ELEMENTS ARE NOTED OR INDICATED ELSEWHERE

LEGEND

N/A	NOT APPLICABLE
316 SS	316 STAINLESS STEEL

CONDUIT LEGEND

6 TSP, 1#14, 1-1/2"C

- 1-1/2"C — CONDUIT SIZE
- 1#14 — 1 #14 WIRE
- 6 TSP — 6 TWISTED SHIELDED PAIRS

GENERAL ELECTRICAL NOTES

1. **SCHEMATIC NATURE**
   PLAN VIEWS ARE SCHEMATIC IN NATURE AND MEANT TO SHOW THE SCHEMATIC ARRANGEMENT OF EQUIPMENT AND CONDUIT.

2. **APPROVED SHOP DRAWINGS**
   USE APPROVED SHOP DRAWINGS FOR LAY OUT OF EQUIPMENT. THE CONTRACT DOCUMENTS WILL VARY FROM THE SHOP DRAWINGS. INFORM THE ENGINEER IMMEDIATELY IF THERE ARE LAY OUT ISSUES OR INADEQUATE SPACE FOR EQUIPMENT OR CLEARANCES. LAND CONDUITS IN OPENINGS OF ENCLOSURES PER THE APPROVED SHOP DRAWINGS, DO NOT USE THE CONTRACT DRAWINGS.

3. **CLEARANCES**
   IT SHALL BE THE CONTRACTOR'S RESPONSIBILITY TO MEET N.E.C. CLEARANCES ABOUT EQUIPMENT. THE SAME APPLIES TO RACEWAY SUPPORTS.

4. **ROUTING**
   CONDUIT ROUTING IS SCHEMATIC IN NATURE. CONDUIT ROUTING IS SHOWN FOR CLARITY ON THE CONTRACT DRAWINGS. ROUTE CONDUITS AS MAY BE REQUIRED.

5. **FIELD VERIFICATIONS**
   FIELD VERIFY ALL EXISTING CONDITIONS. MAKE MINOR ADJUSTMENTS AS NEEDED. INFORM OWNER/ENGINEER OF INCONSISTENCIES IMMEDIATELY IF PROBLEMS OR CONFLICTS EXIST.

6. **COMPLETE AND FUNCTIONAL SYSTEMS**
   PROVIDE ALL LABOR AND MATERIAL FOR A COMPLETE AND FUNCTIONAL SYSTEM. DEMONSTRATE SYSTEM OPERATION TO THE OWNER/ENGINEER.

7. **LABELING**
   THE CONTRACTOR SHALL PROVIDE LAMCOID PRINTED LABELS FOR ALL EQUIPMENT AND TYPED PANELBOARD SHEDULEDS AS REQUIRED.

8. **CONTRACTOR MINIMUM REQUIREMENTS**
   PROVIDE AND INSTALL A COMPLETE ELECTRICAL SYSTEM AS INDICATED ON THE DRAWINGS. ITEMS NOT SHOWN BUT OBVIOUSLY NECESSARY FOR A COMPLETE SYSTEM SHALL BE INCLUDED.

   THE CONTRACTOR SHALL OBTAIN ALL NECESSARY PERMITS, INSPECTIONS AND APPROVALS.

   ALL WORK SHALL CONFORM TO THE NATIONAL ELECTRICAL CODE, NFPA, AND THE LOCAL BUILDING CODES. ALL COMPONENTS SHALL BE U.L. APPROVED.

   CONTRACTOR SHALL BE RESPONSIBLE FOR LOCATING ALL CONCEALED FACILITIES BEFORE ANY WORK BEGINS.

9. **SCOPE OF WORK**
   A. REPLACE POWER SERVICE
   B. NEW LS CONTROL PANEL.
   C. DEMO EXIST. ELECTRICAL AND I&C EQUIPMENT COMPLETELY.
   D. PROVIDE POWER CO. SERVICE COORDINATION FOR DEMO OF EXISTING & INSTALL OF NEW SERVICE.
   E. STARTUP AND TESTING OF PUMPS, GENERATOR, ATS, AND ALL ELECTRICAL EQUIPMENT.

10. **CONDUIT**
    CONDUIT SIZES AS SHOWN ON THE DRAWINGS ARE MINIMUM. THE CONTRACTOR MAY INCREASE AS REQUIRED FOR EASE OF PULLING. ALL UNDERGROUND CONDUITS SHALL BE INSTALLED 24" BELOW FINAL GRADE.

11. **JUNCTION BOXES**
    PROVIDE ADDITIONAL BOXES AS MAY BE REQUIRED.

12. **CONDUCTORS**

    SEE THE SPECIFICATIONS.

13. **GROUNDING**
    PROVIDE GROUND SYSTEM AS INDICATED ON THE DRAWINGS AND AS REQUIRED BY THE NATIONAL ELECTRIC CODE.

14. **FUTURES FACILITIES**
    WHERE FUTURE FACILITIES ARE INDICATED. CONDUIT ROUTING SHALL ACCOUNT FOR SUCH FACILITIES.

15. **RESPONSIBILITIES**
    BIDDERS, SUPPLIERS, EQUIPMENT VENDORS, GENERAL CONTRACTOR, SUB CONTRACTORS AND OTHER SIMILAR ENTITIES ARE REQUIRED TO READ ALL THE CONTRACT DOCUMENTS INCLUDING DRAWINGS AND SPECIFICATIONS.

16. **HOME RUNS**
    CONTRACTOR SHALL COORDINATE HOME RUNS BETWEEN PLAN VIEWS. WHERE ANY CONDUIT IS SHOWN IN ANY PLAN VIEW IT SHALL BE INSTALLED THE ENTIRE LENGTH AS MAY BE REQUIRED.

17. **SEPARATION**
    MAINTAIN MIN. 12" SEPARATION BETWEEN 4-20MADC SIGNAL AND OTHER RACEWAYS.

18. **DEMOLITION**
    a. THE ELECTRICAL SERVICE
    b. THE ELECTRICAL EQUIPMENT AT THE LIFT STATION.
    c. FORMER CONTROL PANEL.
    d. WET WELL CONDUIT AND CABLES.
    e. FLOATS, PUMPS.

19. **SHUT DOWNS**
    CONTRACTOR SHALL COORDINATE ANY POWER DOWNTIME WITH FPL AND THE OWNER. ANY POWER DOWN TIME SHALL BE APPROVED BY THE OWNER. CONTRACTOR SHALL PROVIDE BYPASS PUMPING AS REQUIRED.

20. **RESTORATION**
    CONTRACTOR SHALL RESTORE TO ORIGINAL CONDITION ALL FACILITIES HE DISTURBS. CONTRACTOR SHALL PROVIDE CLEANUP, AND PROPER DISPOSAL, AND PAY ALL FEES FOR ALL DEMOLISHED MATERIALS AND THE LIKE.

21. **WARRANTY**
    CONTRACTOR SHALL WARRANT LABOR AND MATERIALS FOR A PERIOD OF ONE (1) YEAR FROM THE OWNER'S ACCEPTANCE OF THE COMPLETED PROJECT.

22. **LRD REQUIREMENTS**
    PROVIDE MATERIALS AND METHODS PER LOXAHATCHEE RIVER DISTRICT REQUIREMENTS.

ELECTRICAL ABBREVIATIONS

CP	CONTROL PANEL	LLA	LOW LEVEL ALARM	RTU	REMOTE TERMINAL UNIT
CM	COMPRESSOR	LSCP	LIFT STATION CONTROL PANEL	SM	SUB-METER
CR	CONTROL RELAY	LRD	LOXAHATCHEE RIVER DISTRICT	SA	SURGE ARRESTER
CP	CONTROL PANEL	M	MOTOR STARTER	SB	SURGE BOX
DISC	DISCONNECT SWITCH	MCC	MOTOR CONTROL CENTER	SC	SURGE CAPACITOR
ETM	ELAPSED TIME METER	MLO	MAIN LUGS ONLY	SCC	SHIELDED CONTROL CABLE
F	FUSE	MP	MAIN PUMP	SS	SELECTOR SWITCH OR 316 STAINLESS STEEL
FSA	FIELD SURGE ARRESTOR	OL	OVER LOAD RELAY		
GEN	GENERATOR	OH	OVERHEAD	TB	TERM. BOX
GFI	GROUND FAULT INTERRUPTER	OOX	OFF, OFF, ON	TD	TIME DELAY
HLA	HIGH LEVEL ALARM	PB	PUSH BUTTON	TS	TEST SWITCH
HOA	HAND-OFF-AUTO	PB	PULL BOX	WP	WEATHER PROOF
HOR	HAND-OFF-REMOTE	PDP	POWER DIST. PANEL	XFMR	TRANSFORMER
IPB	INST. PULL BOX	PM	POWER MONITOR	ZSC	POSITION SWITCH CLOSED
JP	JOCKEY PUMP	PSCP	PUMP STATION CONTROL PANEL	ZSO	POSTION SWITCH OPEN
LA	LIGHTNING ARRESTER	R,G,A	RED, GREEN, AMBER PILOT LIGHT		

C&W engineering
ELECTRICAL CONSULTANTS
2775 VISTA PARKWAY, SUITE G6
WEST PALM BEACH, FL. 33411
(561) 642-5333
REGISTRATION NUMBERS
C & W ENGINEERING INC. CA# 33315
MICHAEL A. GUIDA, P.E. 60755
58081

DATE	BY	REVISIONS

Date: 6/23/2020
Scale: AS NOTED
Design By: JLR
Drawn By: AOD
Check By: MAG

LOXAHATCHEE RIVER DISTRICT
LIFT STATION #82 REHABILITATION

ELECTRICAL NOTES & LEGENDS

HOLTZ CONSULTING ENGINEERS, INC.
270 SOUTH CENTRAL BLVD., SUITE 207
JUPITER, FLORIDA 33458
PH. (561) 575-2005
Cert. No. 26960
MICHAEL A. GUIDA, P.E.
License No: 60755

E-1

Drawing Name: \\VRSERVER-PC\Dropbox\JOBS\38-Holtz Consulting former (MLS)\58081 ENCON LRD MLS 82\DRAWINGS\02 Electrical Details.dwg Layout Name: E-1 - Plotted by: Andrea Demarchi - Date: 10/5/2020 - 4:49 PM - Holtz Consulting Engineers

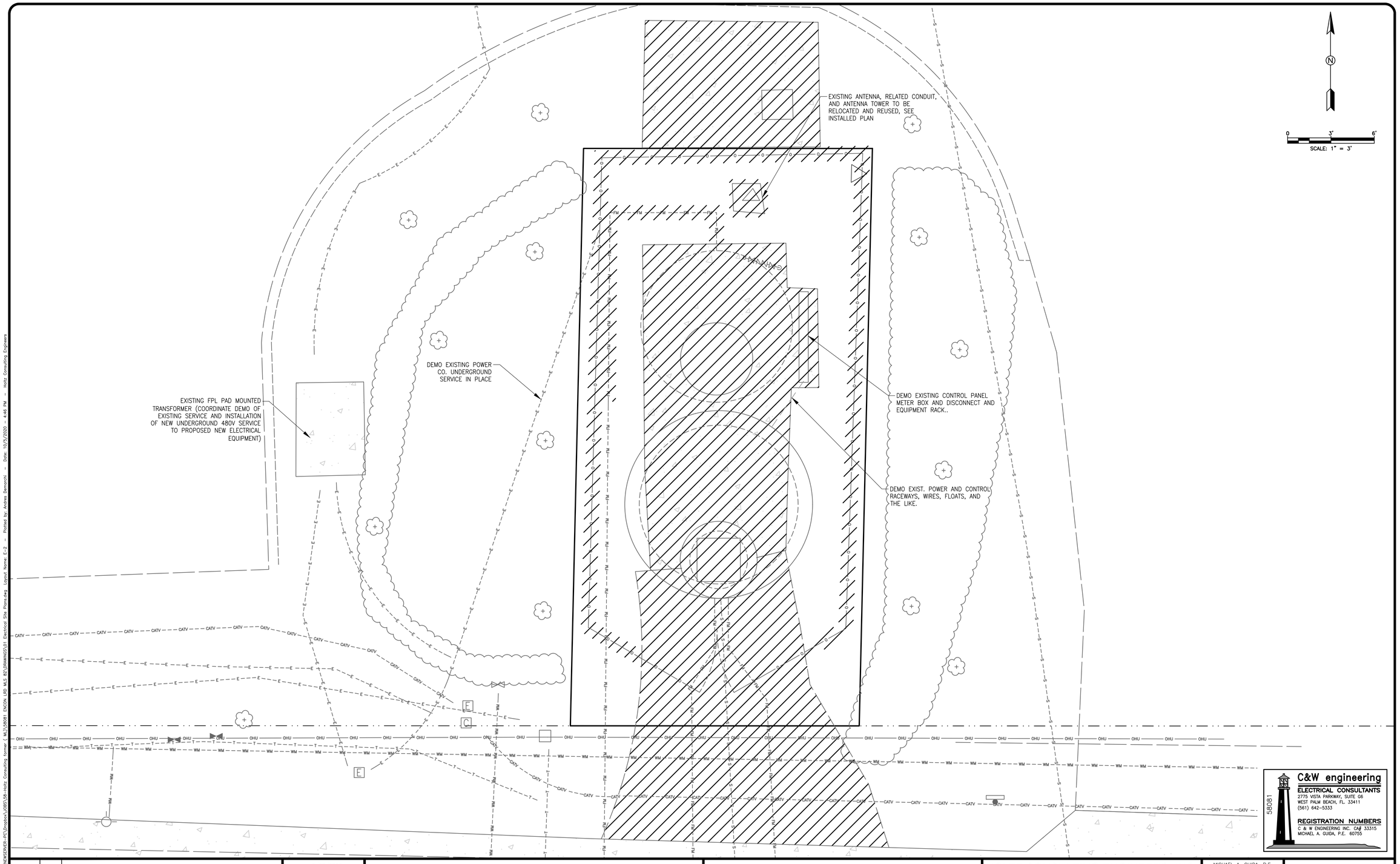

C&W engineering
ELECTRICAL CONSULTANTS
2775 VISTA PARKWAY, SUITE G6
WEST PALM BEACH, FL. 33411
(561) 642-5333
REGISTRATION NUMBERS
C & W ENGINEERING INC. CA# 33315
MICHAEL A. GUIDA, P.E. 60755

58081

DATE	BY	REVISIONS

Date: 6/23/2020
Scale: AS NOTED
Design By: JLR
Drawn By: AOD
Check By: MAG

LOXAHATCHEE RIVER DISTRICT
LIFT STATION #82 REHABILITATION

ELECTRICAL DEMO PLAN

HOLTZ CONSULTING ENGINEERS, INC.
270 SOUTH CENTRAL BLVD., SUITE 207
JUPITER, FLORIDA 33458
PH. (561) 575-2005
Cert. No. 26960

MICHAEL A. GUIDA, P.E.
License No: 60755

E-2

Drawing Name: \\NEWSERVER-PC\Dropbox\JOBS\58-Holtz Consulting former (WL1\58081 EXCON LRD MLS #2\DRAWINGS\01 Electrical Site Plans.dwg Layout Name: E-2 – Plotted by: Andrea Demarchi – Date: 10/5/2020 – 4:46 PM – Holtz Consulting Engineers

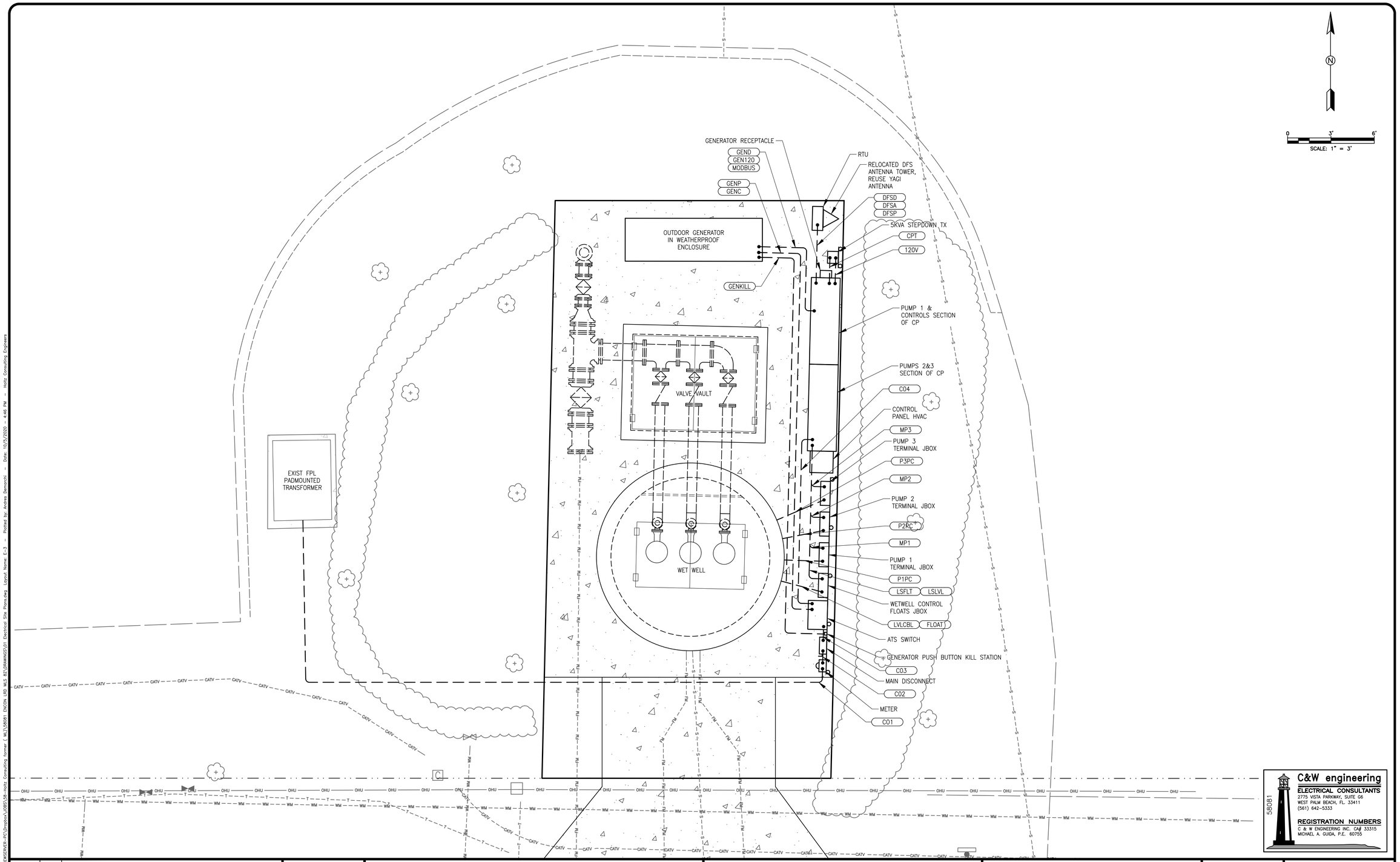

DATE	BY	REVISIONS

Date: 6/23/2020
Scale: AS NOTED
Design By: JLR
Drawn By: AOD
Check By: MAG

LOXAHATCHEE RIVER DISTRICT
LIFT STATION #82 REHABILITATION

ELECTRICAL INSTALL PLAN

HOLTZ CONSULTING ENGINEERS, INC.
270 SOUTH CENTRAL BLVD., SUITE 207
JUPITER, FLORIDA 33458
PH. (561) 575-2005
Cert. No. 26960

MICHAEL A. GUIDA, P.E.
License No: 60755

E-3

Drawing Name: \\NSRSERVER-PC\Dropbox\JOBS\38-Holtz Consulting former E MG\LS081 ENCON LRD MLS R2\DRAWINGS\01 Electrical Site Plans.dwg Layout Name: E-3 - Plotted by: Andres Demorchi - Date: 10/5/2020 - 4:46 PM - Holtz Consulting Engineers

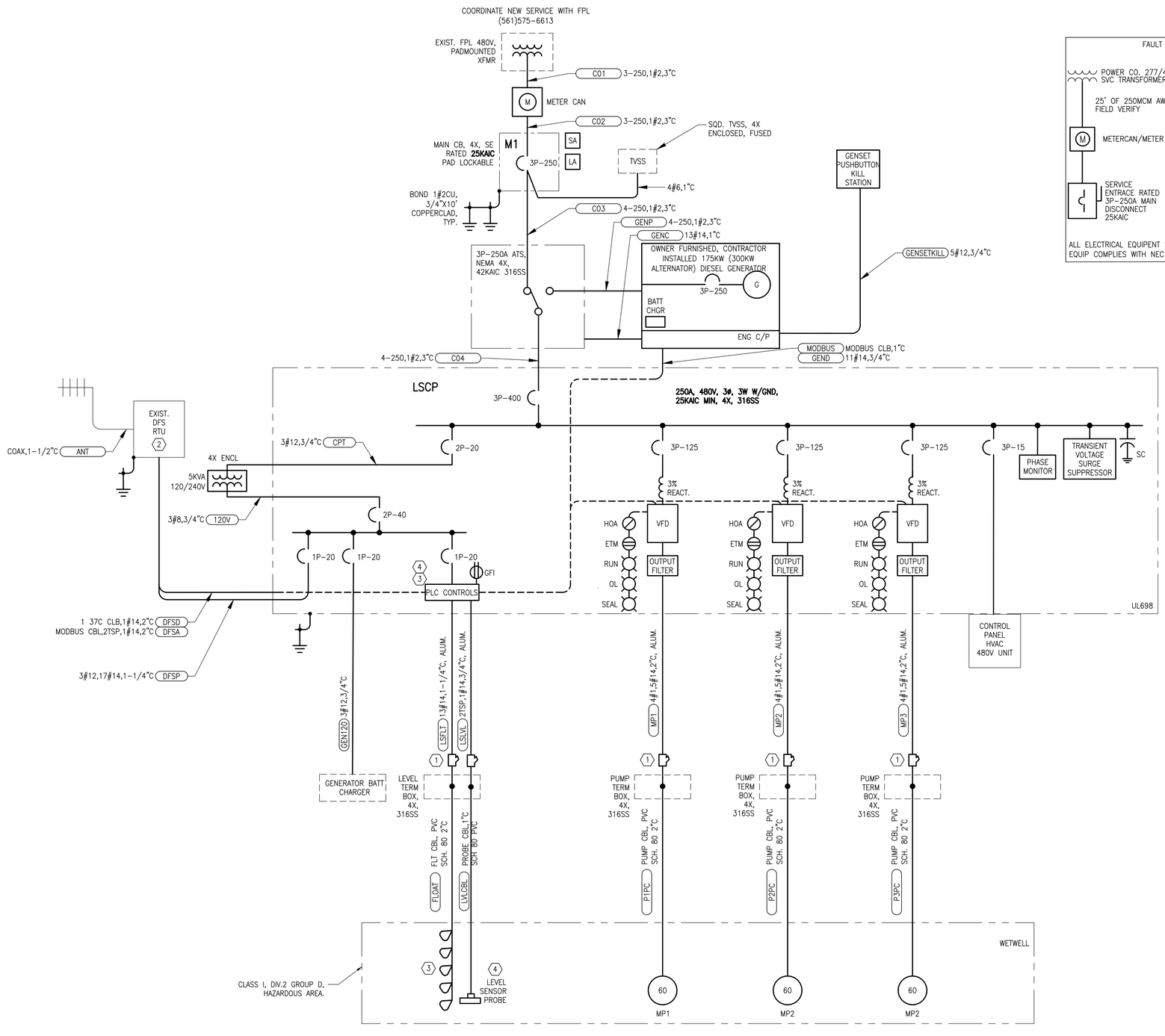

FAULT CURRENT CALCULATION

POWER CO. 277/480V SVC TRANSFORMER

UTILITY FAULT CURRENT 9,864A

25' OF 250MCM AWG CU FIELD VERIFY

MOTOR CONTRIBUTION IS 924 AMPS BASED ON MAX TWO PUMPS TOTAL = 10,788A

METERCAN/METER

SERVICE ENTRACE RATED 3P-250A MAIN DISCONNECT 25KAIC

FAULT CURRENT @ MAIN WITH MOTOR CONTRIBUTION 10,187A

ALL ELECTRICAL EQUIPENT SHALL BE MINIMALLY RATED FOR 25KAIC EQUIP COMPLIES WITH NEC 110.9,110.10 & 110.24 REQUIREMENTS

LOAD CALCULATIONS

DESCRIPTION	AMPS
MAIN PUMP 1 (125%)	96
MAIN PUMP 2	77
MAIN PUMP 3 (BACKUP)	--
MISC. CONTROLS & GEN CKTS	19
TOTAL	192
SERVICE PROVIDED: 250MCM CU	255A

SERVICE VOLTAGE DROP IS LESS THAN 2%
BRANCH CIRCUITS VOLTAGE DROP LESS THAN 3%

SPECIFIC ELECTRICAL NOTES

1. PROVIDE E/P SEAL OFFS, CH, ES SERIES, OR EQUAL.
2. RELOCATE AND REUSE EXISTING RTU AND ANTENNA TOWER, ADD SIGNALS TO RTU AS REQUIRED. SEE OTHER DRAWINGS AND SPECS.
3. FLOAT LEVELS:
   1. HIGH LEVEL ALARM
   2. LAG LAG PUMP ON
   3. LAG PUMP ON
   4. LEAD PUMP ON
   5. ALL PUMPS OFF
   6. LOW LEVEL ALARM
4. MAIN PUMP CONTROL IS LEVEL PROBE VIA PLC I/O AND PLC PROGRAMMING DETERMINING LEVELS BASED ON ANALOG LEVEL SENSING PROBE. FLOATS ARE BACKUP SYSTEM VIA RELAY LOGIC

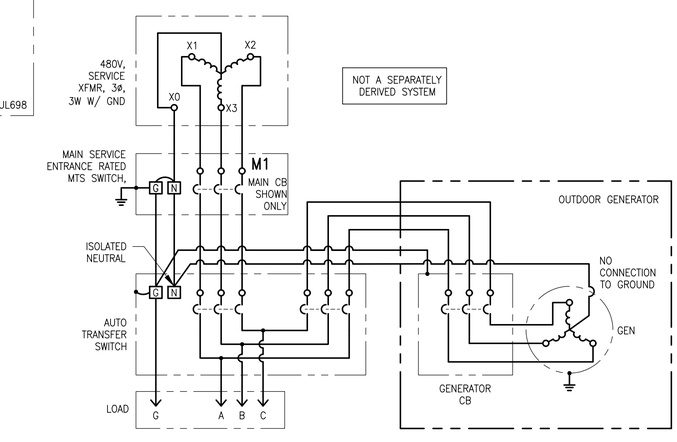

NEUTRAL BONDING DIAGRAM

C&W engineering
ELECTRICAL CONSULTANTS
2775 VISTA PARKWAY, SUITE G6
WEST PALM BEACH, FL. 33411
(561) 642-5333
REGISTRATION NUMBERS
C & W ENGINEERING INC. CA# 33315
MICHAEL A. GUIDA, P.E. 60755
58081

DATE	BY	REVISIONS

Date: 6/23/2020
Scale: AS NOTED
Design By: JLR
Drawn By: AOD
Check By: MAG

LOXAHATCHEE RIVER DISTRICT
LIFT STATION #82 REHABILITATION

ELECTRICAL ONELINE DIAGRAM

HOLTZ CONSULTING ENGINEERS, INC.
HCE
270 SOUTH CENTRAL BLVD., SUITE 207
JUPITER, FLORIDA 33458
PH. (561) 575-2005
Cert. No. 26960
MICHAEL A. GUIDA, P.E.
License No: 60755

E-4

Drawing Name: \\HJWORKGROUP-PC\Dropbox\JOBS\58-Holtz Consulting former (MJ)\58081 ENCON LRD MLS #2\DRAWINGS\02 Electrical Details.dwg Layout Name: E-4 — Plotted by: Andrew Demorchi – Date: 10/5/2020 – 4:45 PM — Holtz Consulting Engineers

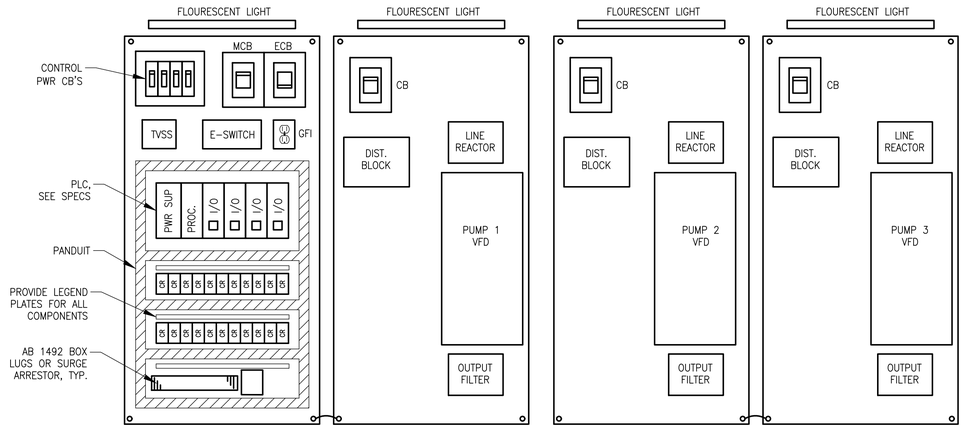

SUBPLATE LAYOUT

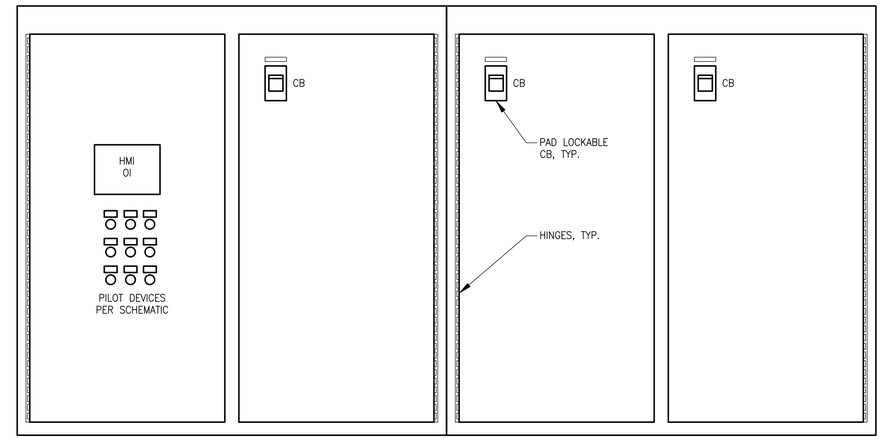

DEAD FRONT VIEW

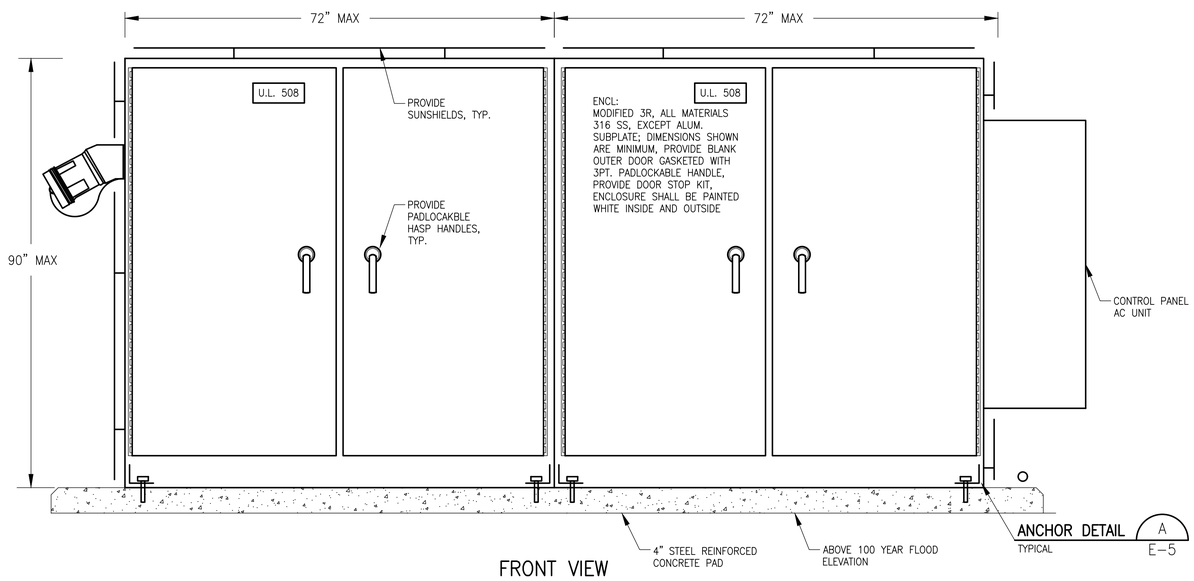

FRONT VIEW

ANCHOR DETAIL (A)
TYPICAL
E-5

GENERAL ELECTRICAL NOTES

1. PROVIDE A CABLE TIE DOWN SYSTEM TO SECURE THE CONTROL PANEL TO WITHSTAND A HURRICANE.
2. SYSTEM SHALL BE DESIGNED BY FLORIDA REGISTERED STRUCTURAL ENGINEER. THE WIND LOAD SHALL BE PER THE AREA OF INSTALLATION, BUT A MINIMUM OF 150 MPH.
3. INCREASE THE EQUIPMENT RATINGS INDICATED.
4. ENCLOSURE SHALL ALSO BE ANCHORED TO EQUIPMENT WALL.

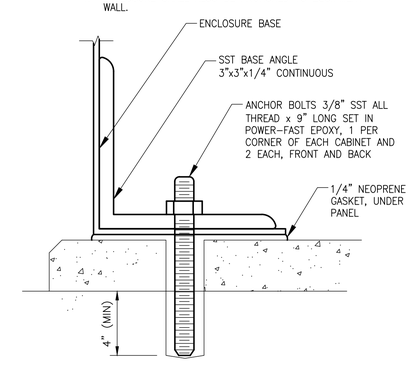

ANCHOR DETAIL (A)
NTS

C&W engineering
ELECTRICAL CONSULTANTS
2775 VISTA PARKWAY, SUITE G6
WEST PALM BEACH, FL. 33411
(561) 642-5333
REGISTRATION NUMBERS
C & W ENGINEERING INC. CA# 33315
MICHAEL A. GUIDA, P.E. 60755
58081

DATE	BY	REVISIONS

Date: 6/23/2020
Scale: AS NOTED
Design By: JLR
Drawn By: AOD
Check By: MAG

LOXAHATCHEE RIVER DISTRICT
LIFT STATION #82 REHABILITATION

LIFT STATION CONTROL PANEL
& VFD ENCLOSURE DETAILS

HOLTZ CONSULTING ENGINEERS, INC.
HCE
270 SOUTH CENTRAL BLVD., SUITE 207
JUPITER, FLORIDA 33458
PH. (561) 575-2005
Cert. No. 26960
MICHAEL A. GUIDA, P.E.
License No: 60755

E-5

Drawing Name: \\HCWSERVER-PC\Dropbox\JOBS\35-Holtz Consulting former (WA)\58081 ENCON LIFT MLS 82\DRAWINGS\02 Electrical Details.dwg Layout Name: E-5 – Plotted by: Andrea Demarchi – Date: 10/5/2020 – 4:45 PM – Holtz Consulting Engineers

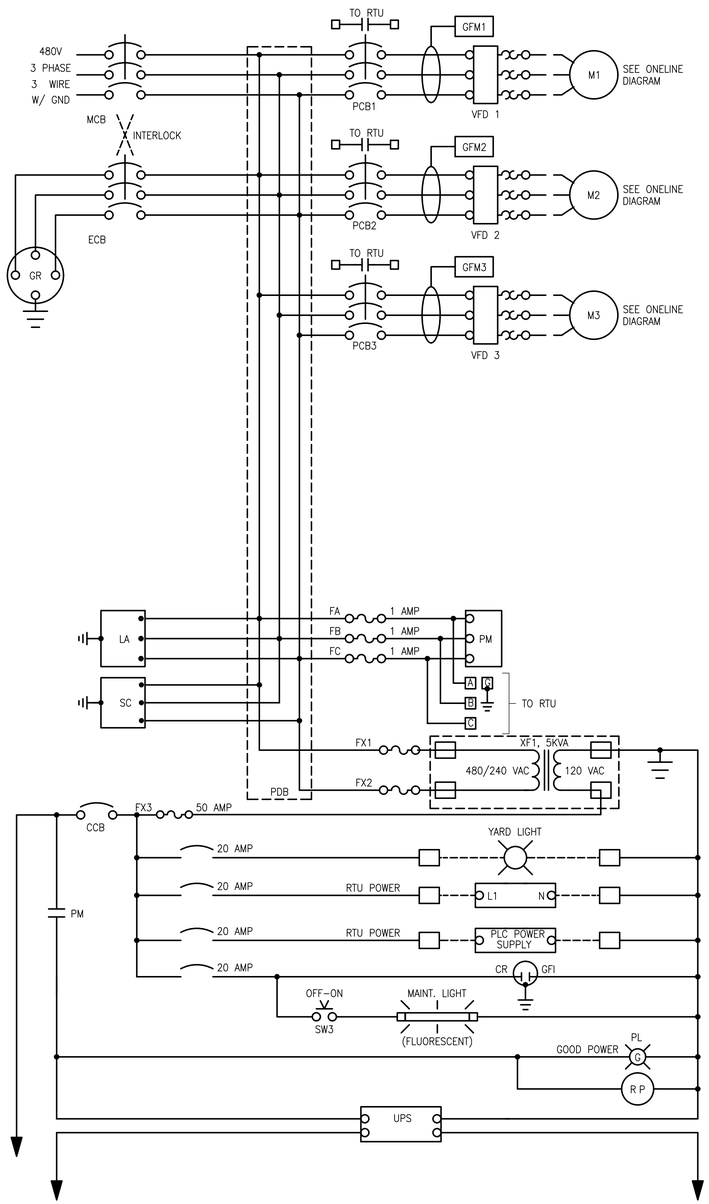

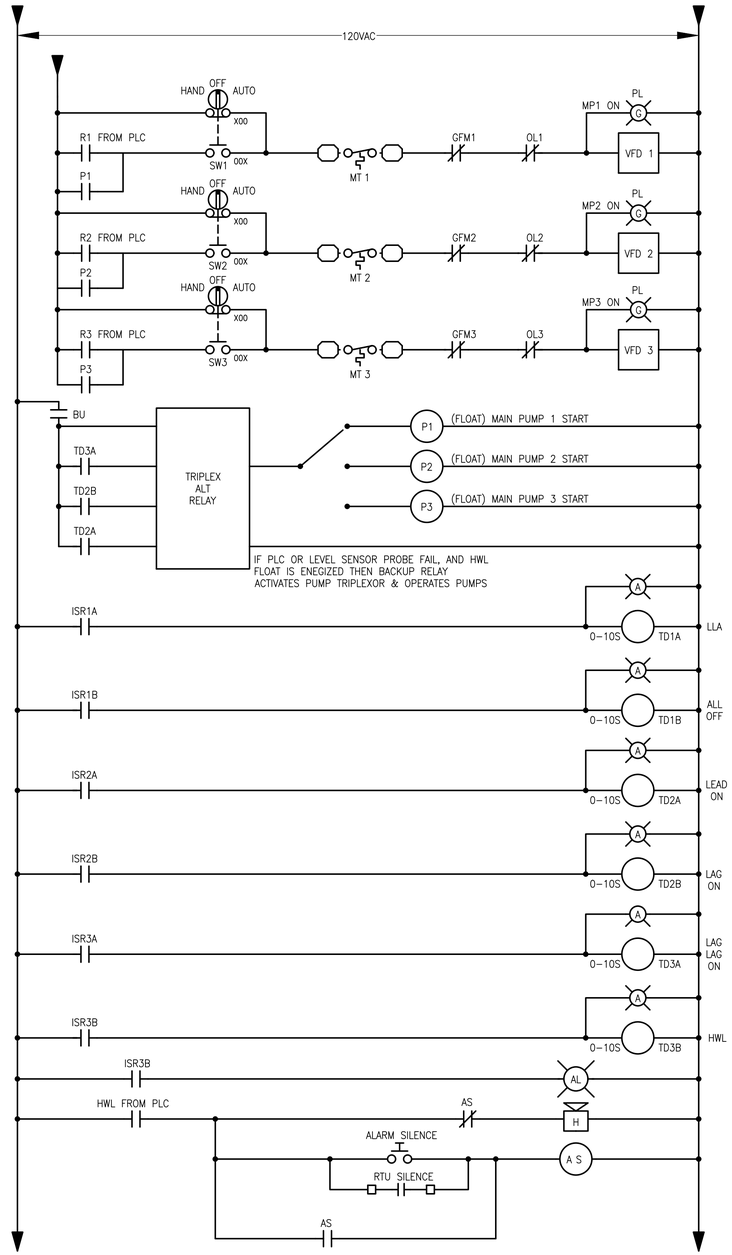

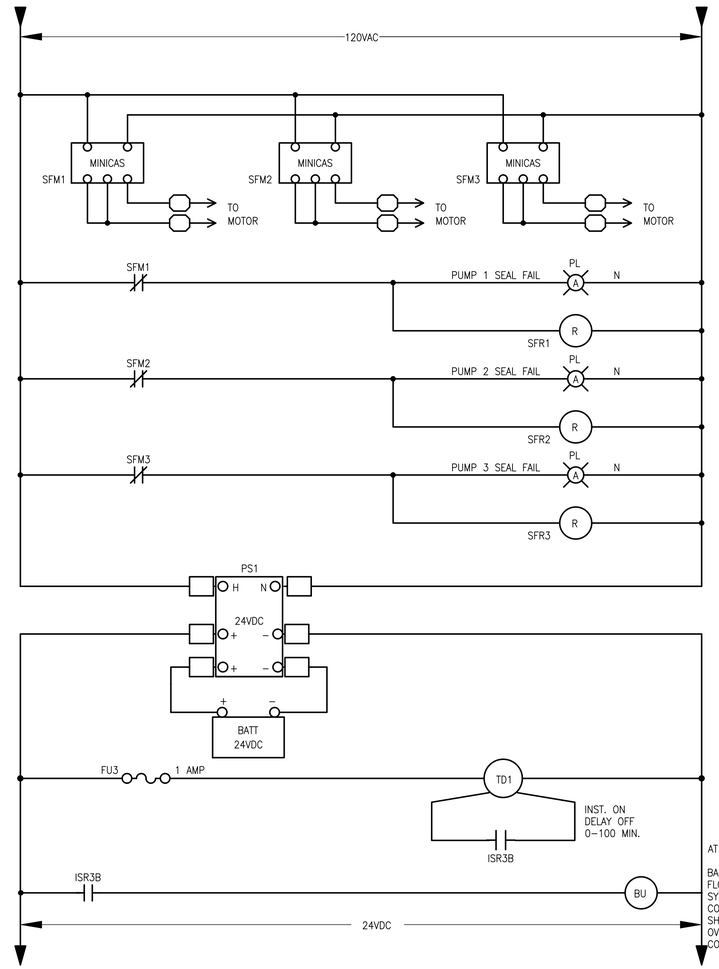

CONTOL SCHEME NOTE:

1. PROVIDE CONTROL RELAY LOGIC TO ALLOW FOR PUMP ALTERNATION VIA FLOATS (BACKUP SYSTEM) AND VIA LEVEL PROBE RUNNING PUMPS TO PLC I/O AND PROGRAMMING. SCADA I/O IS VIA DFS RADIO RTU SYSTEM.

2. CONTROL SCHEMATIC SHOW MINIMUM REQUIREMENTS, PROVIDE ALL ADDITIONAL RELAYS, TIME DELAYS, AND ADDITIONAL PILOT DEVICES AS REQUIRED TO ALLOW FOR TWO OUT OF THREE PUMPS TO OPERATE AT ANY ONE TIME. THIRD PUMP IS A BACKUP. ALL PUMPS SHALL BE STARTED STAGGERED.

C&W engineering
ELECTRICAL CONSULTANTS
2775 VISTA PARKWAY, SUITE G6
WEST PALM BEACH, FL. 33411
(561) 642-5333
58081
REGISTRATION NUMBERS
C & W ENGINEERING INC. CA# 33315
MICHAEL A. GUIDA, P.E. 60755

DATE	BY	REVISIONS

Date: 6/23/2020
Scale: AS NOTED
Design By: JLR
Drawn By: AOD
Check By: MAG

LOXAHATCHEE RIVER DISTRICT
LIFT STATION #82 REHABILITATION

CONTROL PANEL SCHEMATICS, SHEET 1

HOLTZ CONSULTING ENGINEERS, INC.
270 SOUTH CENTRAL BLVD., SUITE 207
JUPITER, FLORIDA 33458
PH. (561) 575-2005
Cert. No. 26960
MICHAEL A. GUIDA, P.E.
License No: 60755

E-6

Drawing Name: \\NUNSERVER-PC\Dropbox\JOBS\58-Holtz Consulting former (MLA)\58081 ENCON LRD MLS 82\DRAWINGS\02 Electrical Details.dwg Layout Name: E-6 -- Plotted by: Andrea Demarchi -- Date: 10/5/2020 -- 4:40 PM -- Holtz Consulting Engineers

PLC CALLS PUMPS TO RUN BASED ON LEVEL SENSOR VIA PLC I/O, RELAYS STATUS TO DFS RTU

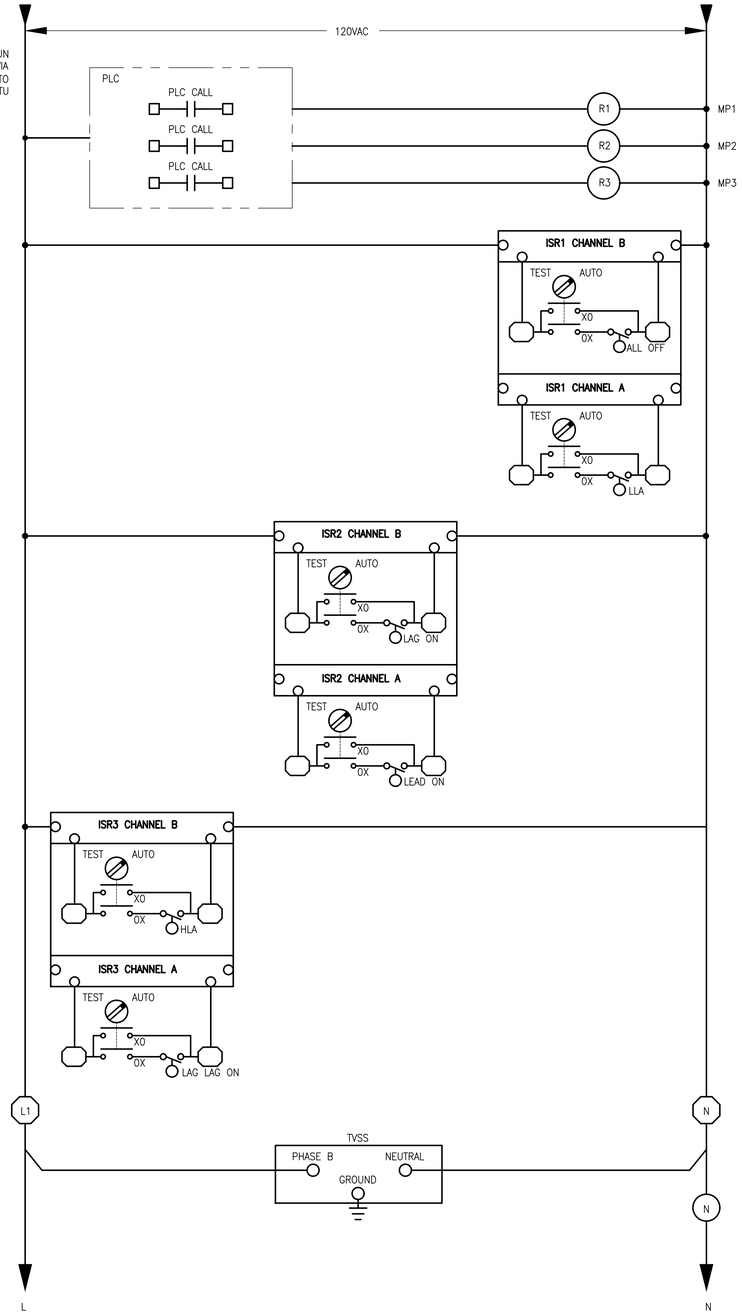

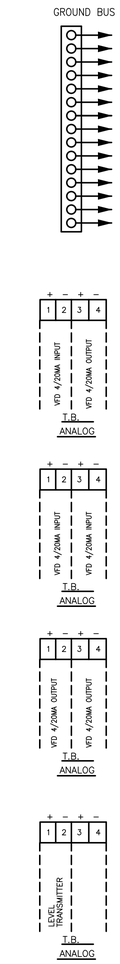

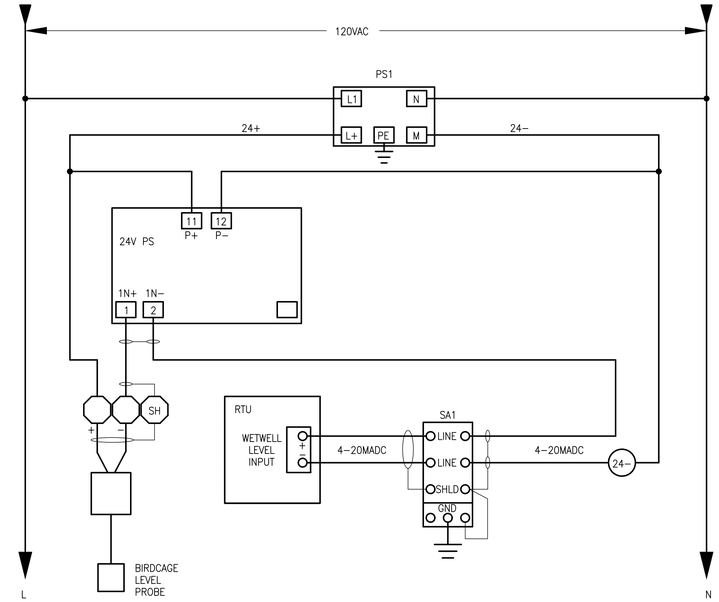

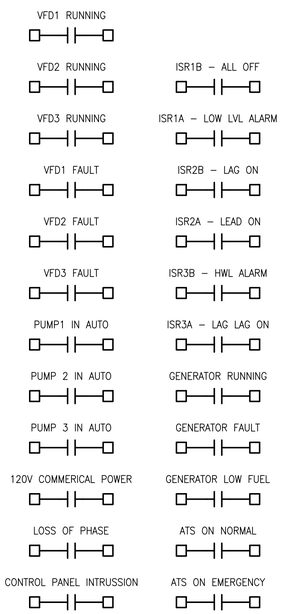

TO PLC & RTU, SEE SPECS

GENERAL ELECTRICAL NOTES

1. PLC MONITORING ALL PUMPS STATUS, ALARMS, INCLUDING VFD EQUIPMENT, HOA SWITCH POSITIONS, FLOAT LEVELS, BACKUP, LOSS OF PHASE, AND THE LIKE, WETHER INDICATED ON THE CONTROL SCHEMATICS OR NOT, REFER TO THE SPECIFICATIONS FOR ADDITIONAL PARAMETERS.

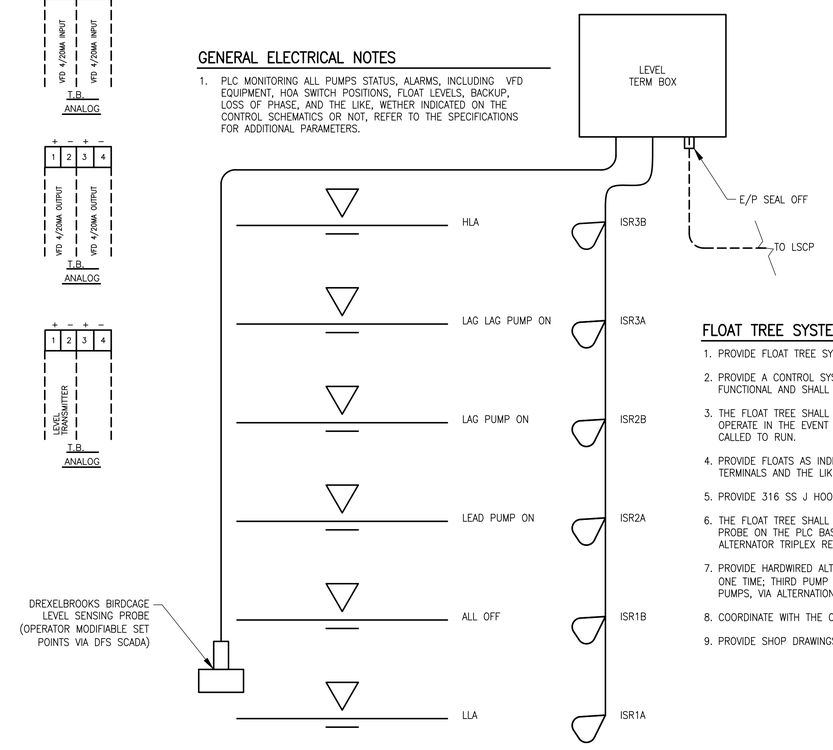

FLOAT TREE SYSTEM REQUIREMENTS

1. PROVIDE FLOAT TREE SYSTEM TO OPERATE AS BACK UP TO THE LEVEL TRANSMITTER SYSTEM.
2. PROVIDE A CONTROL SYSTEM THAT SHALL FUNCTION IN THE EVENT THE SCADA OR PLC IS NOT FUNCTIONAL AND SHALL RELY UPON THE LOCAL FLOAT CONTROL SYSTEM.
3. THE FLOAT TREE SHALL BE A HARD WIRED SYSTEM ADDED TO THE CONTROL PANEL AND OPERATE IN THE EVENT HWL ALARM IS TRIGGERED, THEN PUMPS THROUGH ALTERNATOR ARE CALLED TO RUN.
4. PROVIDE FLOATS AS INDICATED. INCLUDE INTRINSICALLY SAFE RELAYS, TEST SWITCHES, TERMINALS AND THE LIKE. PROVIDE FLOAT STATUS TO PLC AND DFS RTU
5. PROVIDE 316 SS J HOOKS SECURED TO THE WET WELL WALL TO SUPPORT THE FLOATS.
6. THE FLOAT TREE SHALL BE USED TO PUMP DOWN THE WET WELL SIMILAR TO THE LEVEL PROBE ON THE PLC BASED SYSTEM. PUMP ALTERNATION SHALL BE THROUGH HARD WIRED ALTERNATOR TRIPLEX RELAY.
7. PROVIDE HARDWIRED ALTERNATION FOR THE PUMPS. MAX OF TWO PUMPS RUNNING AT ANY ONE TIME; THIRD PUMP (BACKUP PUMP) SHALL BE WIRED TO RUN INTO THE MIX OF TWO PUMPS, VIA ALTERNATION, STAGGERED STARTING.
8. COORDINATE WITH THE OWNER. INCLUDE OWNER PREFERENCES.
9. PROVIDE SHOP DRAWINGS FOR REVIEW AND APPROVAL.

C&W engineering
ELECTRICAL CONSULTANTS
2775 VISTA PARKWAY, SUITE G6
WEST PALM BEACH, FL. 33411
(561) 642-5333
58081
REGISTRATION NUMBERS
C & W ENGINEERING INC. CA# 33315
MICHAEL A. GUIDA, P.E. 60755

DATE	BY	REVISIONS

Date: 6/23/2020
Scale: AS NOTED
Design By: JLR
Drawn By: AOD
Check By: MAG

LOXAHATCHEE RIVER DISTRICT
LIFT STATION #82 REHABILITATION

CONTROL PANEL SCHEMATICS, SHEET 2

HOLTZ CONSULTING ENGINEERS, INC.
HCE
270 SOUTH CENTRAL BLVD., SUITE 207
JUPITER, FLORIDA 33458
PH. (561) 575-2005
Cert. No. 26960
MICHAEL A. GUIDA, P.E.
License No: 60755

E-7

Drawing Name: \\TNWKSRVER-PC\Dropbox\JOBS\58-Holtz Consulting former (MJ)\58081 ENCON LIQD MLS 82\DRAWINGS\02 Electrical Details.dwg Layout Name: E-7 – Plotted by: Andrea Demarchi – Date: 10/5/2020 – 4:49 PM – Holtz Consulting Engineers

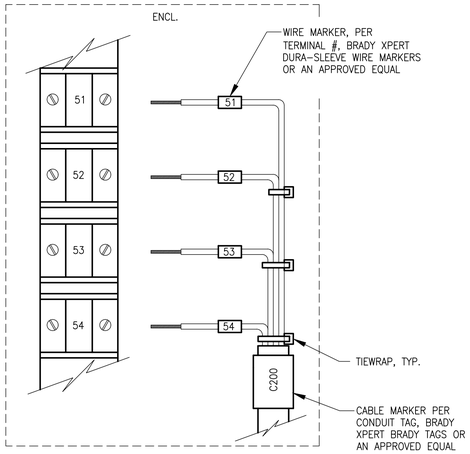

TERMINATION EXAMPLE DETAIL

NTS

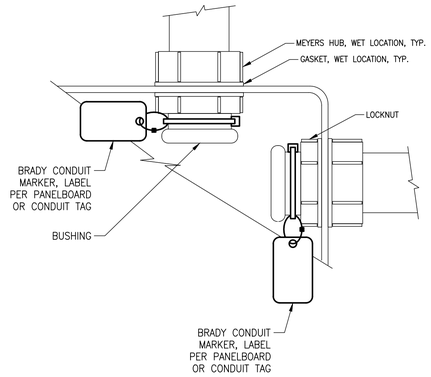

CONDUIT TERMINATION DETAIL

NTS

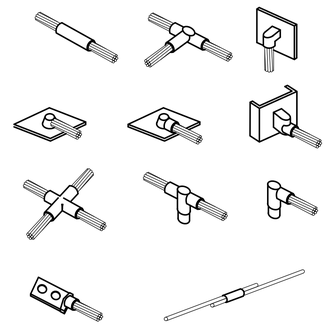

CADWELD DETAILS

NTS

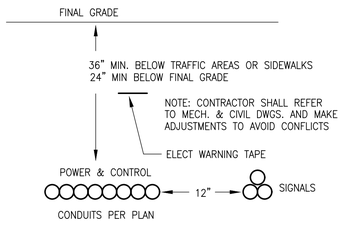

DIRECT BURIED CONDUIT

NTS

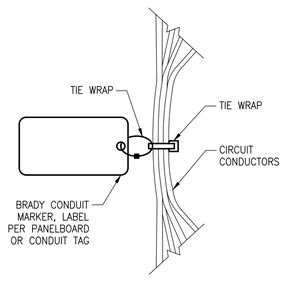

CIRCUIT MARKER DETAIL

NTS

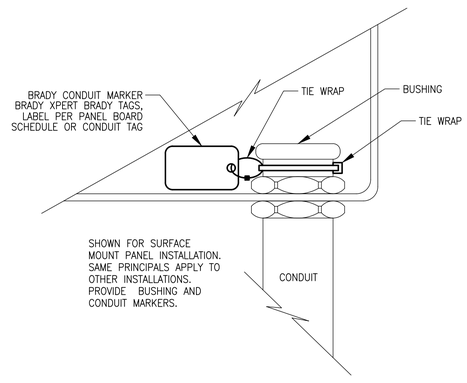

CONDUIT DETAIL

NTS

C&W engineering
ELECTRICAL CONSULTANTS
2775 VISTA PARKWAY, SUITE G6
WEST PALM BEACH, FL. 33411
(561) 642-5333
REGISTRATION NUMBERS
C & W ENGINEERING INC. CA# 33315
MICHAEL A. GUIDA, P.E. 60755
58081

DATE	BY	REVISIONS

Date: 6/23/2020
Scale: AS NOTED
Design By: JLR
Drawn By: AOD
Check By: MAG

LOXAHATCHEE RIVER DISTRICT
LIFT STATION #82 REHABILITATION

ELECTRICAL DETAILS

HOLTZ CONSULTING ENGINEERS, INC.
HCE
270 SOUTH CENTRAL BLVD., SUITE 207
JUPITER, FLORIDA 33458
PH. (561) 575-2005
Cert. No. 26960

MICHAEL A. GUIDA, P.E.
License No: 60755

E-8

Drawing Name: \\NLRIVER-FS\Dropbox\JOBS\58-Holtz Consulting Corrar (ML)\58081 ENCON LRD MLS 82\DRAWINGS\02 Electrical Details.dwg Layout Name: E-8 – Plotted by: Andrea Demarchi – Date: 10/5/2020 – 4:49 PM – Holtz Consulting Engineers

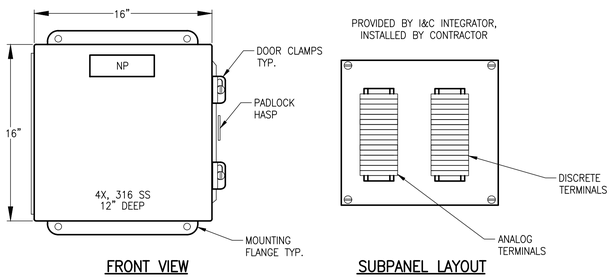

CONTROL TERMINAL JBOX DETAIL (B)

NTS

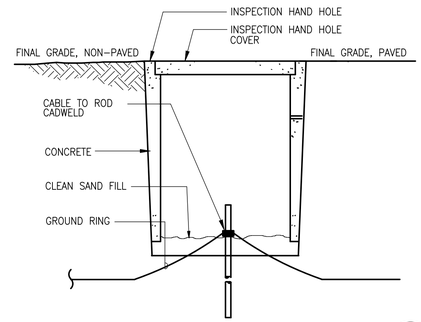

GROUND WELL (C)

NTS

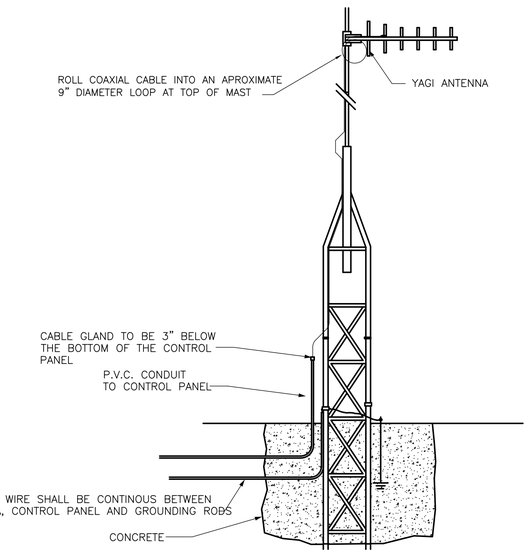

NOTES: (PLEASE REFER TO WRITTEN SPECIFICATIONS FOR ADDITIONAL REQUIREMENTS)

1. ANTENNA HEIGHT SHALL CONFORM TO F.C.C. AND TELEMETRY MANUFACTURERS REQUIREMENTS AND SPECIFICATIONS.
2. TELEMETRY ANTENNA AND RELATED EQUIPMENT AS MANUFACTURED BY DATA FLOW SYSTEMS, INC. SHALL BE COMPATIBLE WITH EXISTING FPUA TELEMETRY SYSTEM.
3. GROUND WIRE SHALL BE CONTINOUS FROM FIRST GROUND ROD TO SERVICE DISCONNECT, TO CONTROL PANEL, TO ANTENNA BASE, TO SECOND GROUND ROD 6' TO 8' FROM FIRST GROUND ROD.
4. ANTENNA SHALL BE INSTALLED TO WITHSTAND 150 MPH WINDS.

TELEMETRY ANTENNA DETAIL (E)

NTS

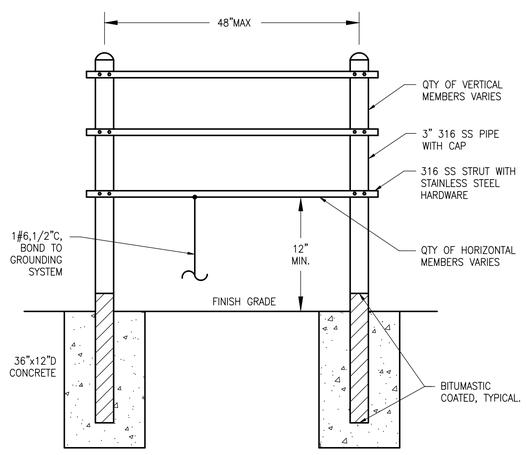

PIPE STAND, CONCRETE MOUNT (D)

NTS

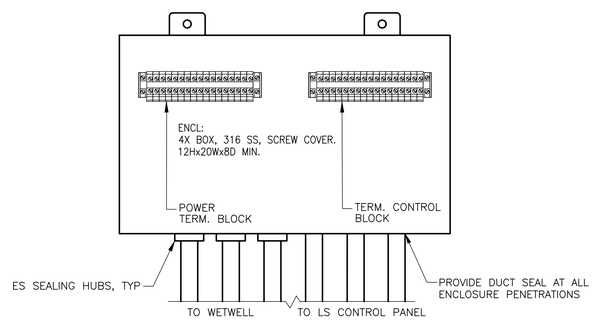

THE ABOVE IS TYPICAL FOR TERMINAL BOXES

PUMP TERMINAL JBOX DETAIL

NTS

C&W engineering
ELECTRICAL CONSULTANTS
2775 VISTA PARKWAY, SUITE G6
WEST PALM BEACH, FL. 33411
(561) 642-5333
58081
REGISTRATION NUMBERS
C & W ENGINEERING INC. CA# 33315
MICHAEL A. GUIDA, P.E. 60755

DATE	BY	REVISIONS

Date: 6/23/2020
Scale: AS NOTED
Design By: JLR
Drawn By: AOD
Check By: MAG

LOXAHATCHEE RIVER DISTRICT
LIFT STATION #82 REHABILITATION

ELECTRICAL DETAILS

HOLTZ CONSULTING ENGINEERS, INC.
270 SOUTH CENTRAL BLVD., SUITE 207
JUPITER, FLORIDA 33458
PH. (561) 575-2005
Cert. No. 26960
MICHAEL A. GUIDA, P.E.
License No: 60755

E-9

Drawing Name: \\NAS2(RDB-PC)\Dropbox\JOBS\58-Holtz Consulting former (MJ)\58081 ENCON LIQ MJS 82\DRAWINGS\02 Electrical Details.dwg Layout Name: E-9 – Plotted by: Andrea Demarchi – Date: 10/5/2020 – 4:49 PM – Holtz Consulting Engineers

PROCESS & INSTRUMENTATION LEGEND

- STATUS LIGHT, PANEL MOUNTED
- AUDIBLE HORN
- PANEL MOUNTED DEVICE
- SUB PANEL MOUNTED DEVICE
- FIELD MOUNTED DEVICE
- COMPUTER FUNCTION
- PLC FUNCTION
- PANEL MOUNTED HARDWIRED LOGIC
- CONTINUATION
- WIRING CONTINUATION
- HOSE CONNECTION
- ANNUNCIATOR WINDOW/POINT
- SOLENOID VALVE
- FLUSHING CONNECTION
- INSERTION MAGMETER
- SAMPLE POINT
- CONTROL SIGNAL RELAY
- MANUAL BUTTERFLY VALVE
- MANUAL GATE VALVE
- MANUAL BALL VALVE
- SWING ARM CHECK VALVE
- ROTAMETER
- FLOW ELEMENT (VENTURI)
- FLOW ELEMENT (ORIFICE PLATE)
- FLOW RESTRICTER
- LEVEL (BUBBLE TUBE)
- LEVEL (FLOAT)
- CHEMICAL METER PUMP
- FLOW METER (MAGNETIC)
- PLC INPUT/OUTPUT POINT
- DIAPHRAM SEALS, FACTORY FACTORY FILLED SILICONE
- PRIMARY PROCESS LINE
- EXISTING PROCESS LINE
- ELECTRICAL SIGNAL (PROPOSED)
- ELECTRICAL SIGNAL (EXISTING)
- VENDOR SUPPLIED CABLE
- 120V POWER SUPPLY
- FLOOR DRAIN
- PROCESS FLUME
- INSTRUMENT AIR COMPRESSOR
- STATIC MIXER
- PRESSURE SENSOR (FLANGE)
- DUPLEX GFR
- AIR RELIEF VALVE
- FLOW SWITCH
- OPERATOR I'FACE

AE XYZ XX — FUNCTIONAL INDENTIFICATION

XX – ANALYZER
CLR – CHLORINE RESIDUAL
COND – CONDUCTIVITY
DO – DISSOLVED OXYGEN
TURB. – TURBIDITY
pH – pH
TSS – TOTAL SUSPENDED SOLIDS

MEANINGS OF IDENTIFICATION LETTERS

	FIRST LETTER		SUCCEEDING LETTERS		
	MEASURED OR INITIATING VARIABLE	MODIFIER	READOUT OR PASSIVE FUNCTION	OUTPUT FUNCTION	MODIFIER
A	ANALYSIS		ALARM		
B	USERS' CHOICE		USER'S CHOICE	USER'S CHOICE	USER'S CHOICE
C	CONDUCTIVITY (ELECTRICAL)			CONTROL	
D	DENSITY (MASS) OR SPECIFIC GRAVITY	DIFFERENTIAL			
E	VOLTAGE (EMF)		PRIMARY ELEMENT		
F	FLOW RATE	RATIO (FRACTION)			
G	GAUGING (DIMENSIONAL)		GLASS		
H	HAND (MANUALLY INITIATED)		AUDIBLE HORN		HIGH
I	CURRENT (ELECTRICAL)		INDICATE		
J	POWER	SCAN			
K	TIME OR TIME SCHEDULE			CONTROL STATION	
L	LEVEL		LIGHT (PILOT)		LOW
M	MOISTURE OR HUMIDITY				MIDDLE OR INTERMEDIATE
N	AMPLITUDE		USER'S CHOICE	USER'S CHOICE	USER'S CHOICE
O	USER'S CHOICE		ORIFICE (RESTORATION)		
P	PRESSURE OR VACUUM		POINT (TEST CONN.)		
Q	QUANTITY OR EVENT	INTEGRATE OR TOTALIZE			
R	RUN		RELAY		
S	SPEED OR FREQUENCY	SAFETY		SWITCH	
T	TEMPERATURE			TRANSMIT	
U	MULTIVARIABLE		MULTIFUNCTION	MULTIFUNCTION	MULTIFUNCTION
V	VISCOSITY			VALVE, DAMPER OR LOUVER	
W	WEIGHT OR FORCE		WELL		
X	FAILURE				
Y	USER'S CHOICE			RELAY OR COMPUTE	
Z	POSITION			DRIVE, ACTUATE OR UNCLASSIFIED FINAL CONTROL ELEMENT	

GENERAL NOTES

1. THE I SHEETS SHALL BE USED FOR GENERAL ARRANGEMENT OF INSTRUMENTS, FIELD CONTROL PANELS, VENDOR CONTROL PANELS AND THE LIKE AND TO SHOW PLC AND OPERATOR INTERFACE REQUIREMENTS. IT IS NOT MEANT TO SHOW MECHANICAL EQUIPMENT REQUIREMENTS, SIZES AND THE LIKE.
2. I&C SUPPLIER SHALL PROVIDE PLC AND CONFIGURE INSTRUMENT AND CONTROL EQUIPMENT AS MAY BE REQUIRED FOR A COMPLETE AND FUNCTIONAL SYSTEM. COORDINATE W/OWNER FOR OWNER FURNISHED EQUIPMENT GENERATOR AND ATS SIGNALS.
3. PROVIDE NEW I/O INDICATED AND TERMINATE SIGNALS AT FIELD INSTRUMENTS.

ABBREVIATIONS

AI	ANALOG INPUT	LCP	LEVEL CONTROL PANEL
AO	ANALOG OUTPUT	LR	LOCAL OR REMOTE
AM	AUTOMATIC OR MANUAL	LOR	LOCAL OFF REMOTE
ATB	ANALOG TERMINAL BOX	MB	MOD BUS
CL	CHLORINE	MB+	MOD BUS PLUS
CP	CONTROL PANEL	MCC	MOTOR CONTROL CENTER
CTM	CURRENT TRIP MODULE	MCP	MAIN CONTROL PANEL
DI	DISCRETE INPUT	MOA	MANUAL OR OFF OR AUTOMATIC
DN	DEVICE NET	MOD	MODULATING
DO	DISCRETE OUTPUT	OC	OPEN OR CLOSE
DTB	DISCRETE TERMINAL BOX	OAC	OPEN AUTO CLOSE
EN	ETHERNET	OHC	OPEN OR HOLD OR CLOSE
ES	ELECTRICAL SUPPLY	PB	PUSH BUTTON
ETM	ELAPSED TIME METER	PCP	POSITION CONTROL PROCESSOR
F	FLUORIDE	PLC	PROGRAMMABLE LOGIC CONTROLLER
FCD	FLOW CONTROL DAMPER	RCT	REPEAT CYCLE TIMER
FCV	FLOW CONTROL VLV, OPEN-CLOSE	RTM	RUN TIME METER
FMD	FLOW MODULATING DAMPER	RTU	REMOTE TERMINAL UNIT
FMV	FLOW MODULATING VALVE	RO	READ OUT, DIGITAL
FOC	FIBER OPTIC CABLE	SDI	SILT DENSITY INDEX
FP	FIELD PANEL	SI	SIGNAL ISOLATOR
HO	HAND OR OFF	S.P.	SAMPLE POINT
HOA	HAND OR OFF OR AUTOMATIC	TCLR	TOTAL CHLORINE
HOR	HAND OR OFF OR REMOTE	VFD	VARIABLE FREQUENCY DRIVE
LA	LOCAL OR AUTO	YN	YES OR NO

C&W engineering
ELECTRICAL CONSULTANTS
2775 VISTA PARKWAY, SUITE G6
WEST PALM BEACH, FL. 33411
(561) 642-5333
58081
REGISTRATION NUMBERS
C & W ENGINEERING INC. C# 33315
MICHAEL A. GUIDA, P.E. 60755

DATE	BY	REVISIONS

Date: 6/23/2020
Scale: AS NOTED
Design By: JLR
Drawn By: AOD
Check By: MAG

LOXAHATCHEE RIVER DISTRICT
LIFT STATION #82 REHABILITATION

I&C LEGEND

HOLTZ CONSULTING ENGINEERS, INC.
270 SOUTH CENTRAL BLVD., SUITE 207
JUPITER, FLORIDA 33458
PH. (561) 575-2005
Cert. No. 26960
MICHAEL A. GUIDA, P.E.
License No: 60755

I-1

Drawing Name: \\NAS82\RVSD-PC\Dropbox\JOBS\58-Holtz Consulting former (MG)\58081 ENCON LIQD MGS 82\DRAWINGS\03 Electrical I&C.dwg Layout Name: I-1 – Plotted by: Andrea Demarchi – Date: 10/5/2020 – 4:47 PM – Holtz Consulting Engineers

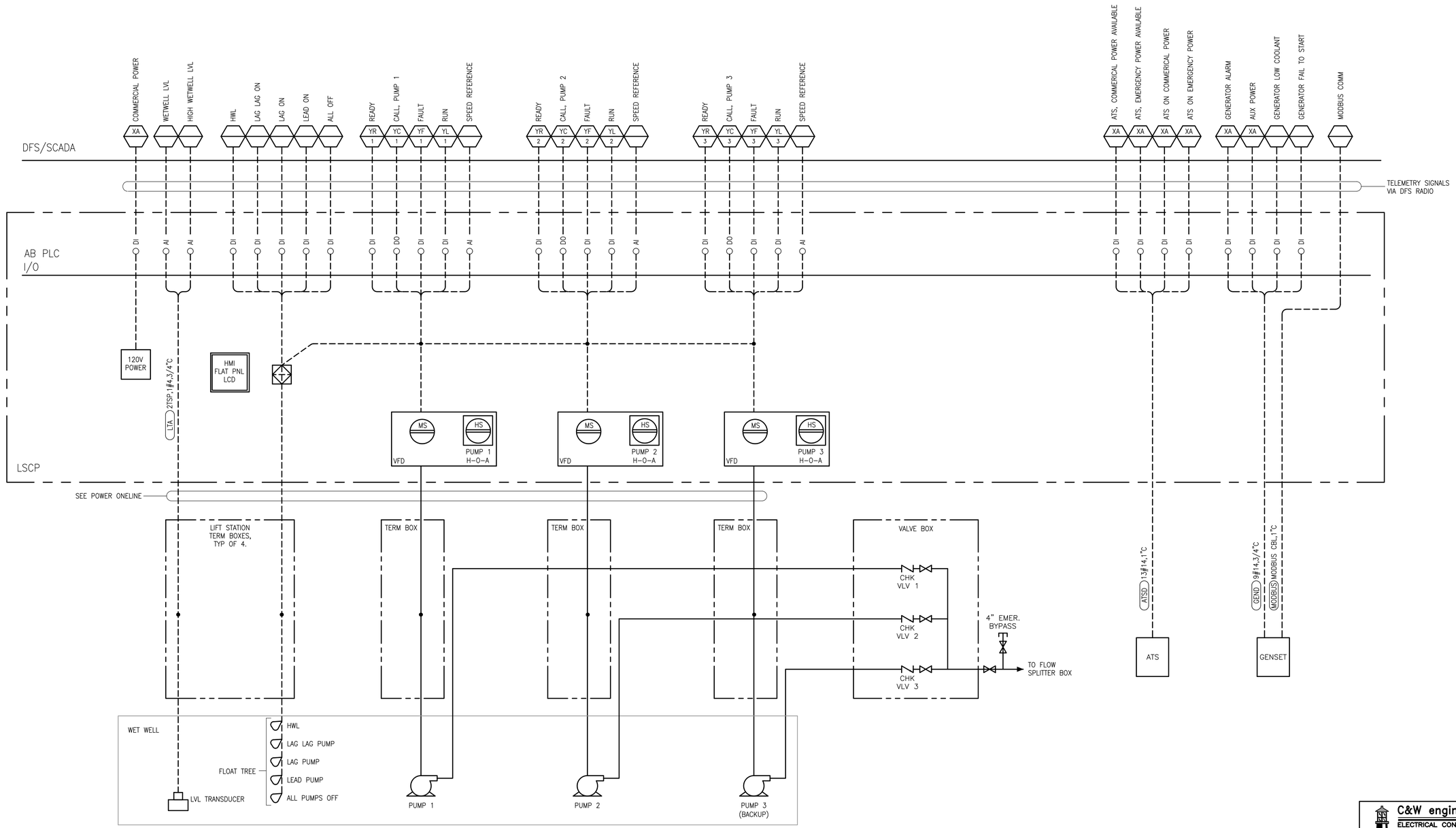

C&W engineering
ELECTRICAL CONSULTANTS
2775 VISTA PARKWAY, SUITE G6
WEST PALM BEACH, FL. 33411
(561) 642-5333

REGISTRATION NUMBERS
C & W ENGINEERING INC. CA# 33315
MICHAEL A. GUIDA, P.E. 60755

58081

DATE	BY	REVISIONS

Date: 6/23/2020
Scale: AS NOTED
Design By: JLR
Drawn By: AOD
Check By: MAG

LOXAHATCHEE RIVER DISTRICT
LIFT STATION #82 REHABILITATION

I&C DIAGRAM

HOLTZ CONSULTING ENGINEERS, INC.
270 SOUTH CENTRAL BLVD., SUITE 207
JUPITER, FLORIDA 33458
PH. (561) 575-2005
Cert. No. 26960

MICHAEL A. GUIDA, P.E.
License No: 60755

I-2

Drawing Name: \\VNUPSERVER-PC\Dropbox\JOBS\38-Holtz Consulting former (MLS)\58081 ENCON LRD MLS 82\DRAWINGS\03 Electrical\I&C.dwg Layout Name: I-2 – Plotted by: Andrea Demarchi – Date: 10/5/2020 – 4:47 PM – Holtz Consulting Engineers

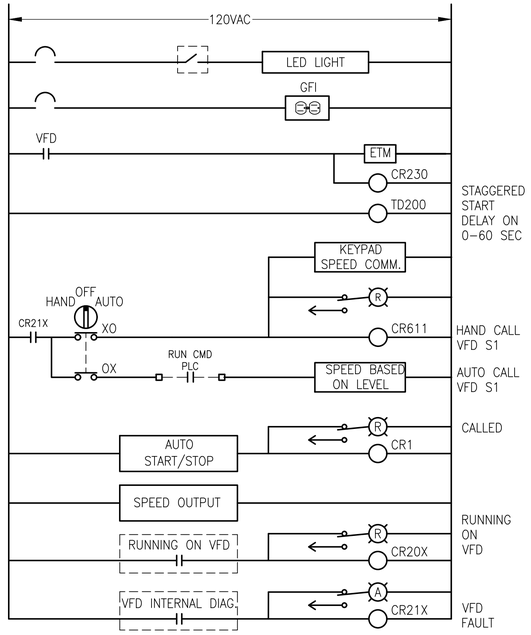

NOTE: X=1,2,3 FOR VFD 1, 2 & 3

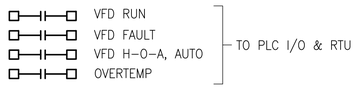

VFD SCHEMATIC

SHOWN FOR STORM 1, TYP. FOR EACH OF 3.

C&W engineering
ELECTRICAL CONSULTANTS
2775 VISTA PARKWAY, SUITE G6
WEST PALM BEACH, FL. 33411
(561) 642-5333
REGISTRATION NUMBERS
C & W ENGINEERING INC. CA# 33315
MICHAEL A. GUIDA, P.E. 60755
58081

DATE	BY	REVISIONS

Date: 6/23/2020
Scale: AS NOTED
Design By: JLR
Drawn By: AOD
Check By: MAG

LOXAHATCHEE RIVER DISTRICT
LIFT STATION #82 REHABILITATION

VFD SCHEMATIC

HOLTZ CONSULTING ENGINEERS, INC.
270 SOUTH CENTRAL BLVD., SUITE 207
JUPITER, FLORIDA 33458
PH. (561) 575-2005
Cert. No. 26960

MICHAEL A. GUIDA, P.E.
License No: 60755

I-3

Drawing Name: \\NLRSERVER-PC\Dropbox\JOBS\58-Holtz Consulting Corrar (ML)\58081 ENCON LRD MLS #2\DRAWINGS\03 Electrical MCC.dwg Layout Name: I-3 -- Plotted by: Andres Demarchi -- Date: 10/5/2020 -- 4:47 PM -- Holtz Consulting Engineers

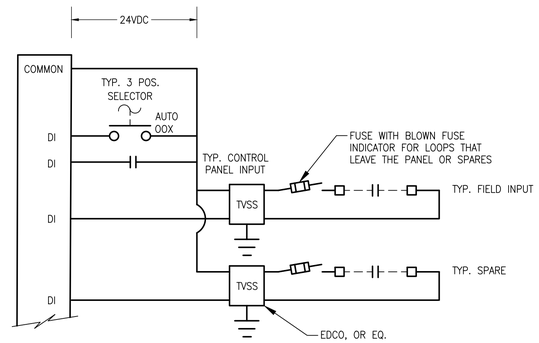

TYPICAL DI DIAGRAM

NTS

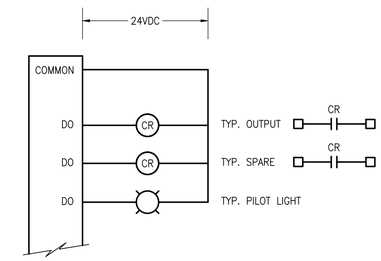

TYPICAL DO DIAGRAM

NTS

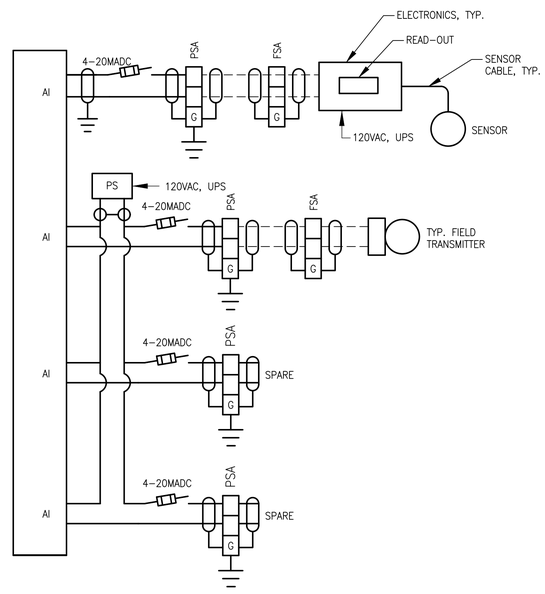

TYPICAL AI LOOP DIAGRAM

NTS

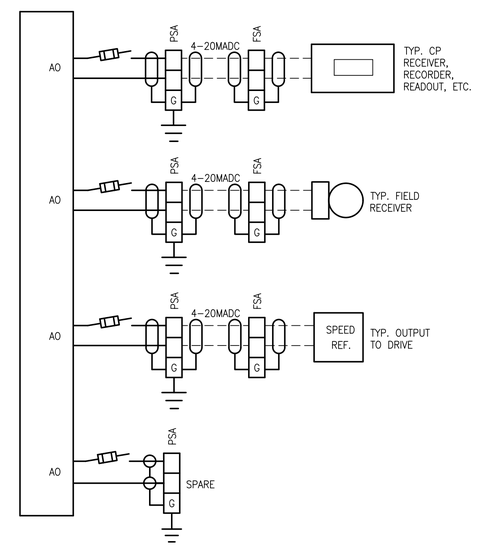

TYPICAL AO LOOP DIAGRAM

NTS

C&W engineering
ELECTRICAL CONSULTANTS
2775 VISTA PARKWAY, SUITE G6
WEST PALM BEACH, FL. 33411
(561) 642-5333
58081
REGISTRATION NUMBERS
C & W ENGINEERING INC. CA# 33315
MICHAEL A. GUIDA, P.E. 60755

DATE	BY	REVISIONS

Date: 6/23/2020
Scale: AS NOTED
Design By: JLR
Drawn By: AOD
Check By: MAG

LOXAHATCHEE RIVER DISTRICT
LIFT STATION #82 REHABILITATION

STANDARD LOOP DIAGRAM

HOLTZ CONSULTING ENGINEERS, INC.
270 SOUTH CENTRAL BLVD., SUITE 207
JUPITER, FLORIDA 33458
PH. (561) 575-2005
Cert. No. 26960

MICHAEL A. GUIDA, P.E.
License No: 60755

I-4

Drawing Name: \\NLRSERVER-PC\Dropbox\JOBS\58-Holtz Consulting Corrnar (ML)\58081 ENCON LRD MLS #2\DRAWINGS\03 Electrical \Mc-dwg Layout Name: I-4 -- Plotted by: Andres Demarchi -- Date: 10/5/2020 -- 4:47 PM -- Holtz Consulting Engineers

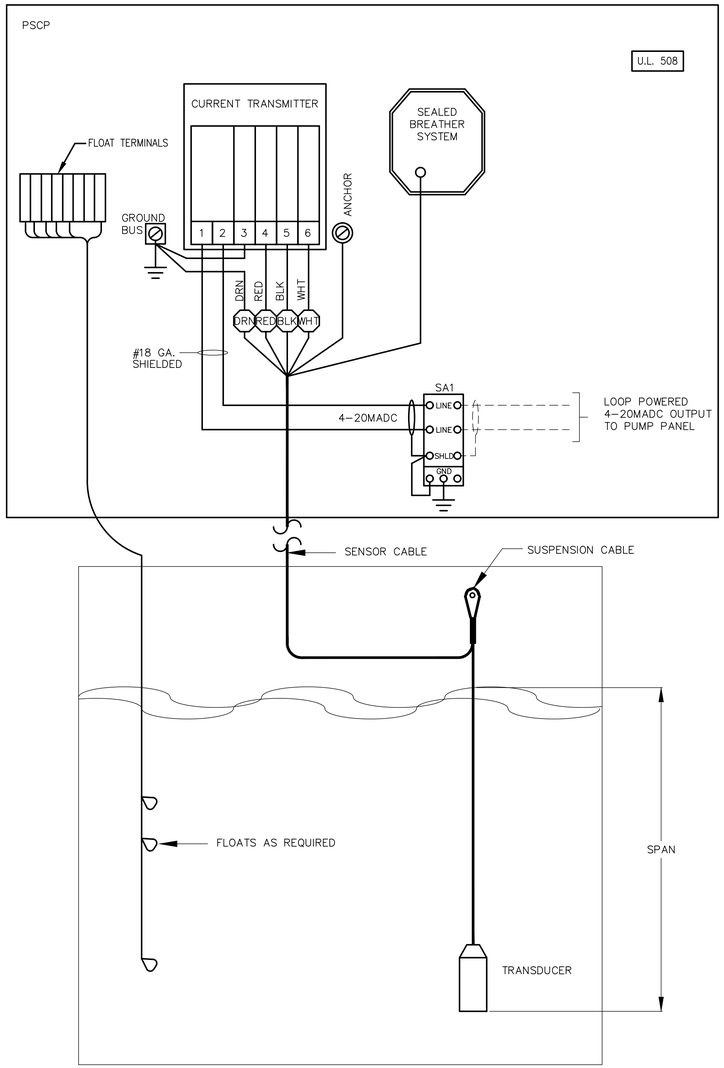

LEVEL SENSOR PROBE

NTS

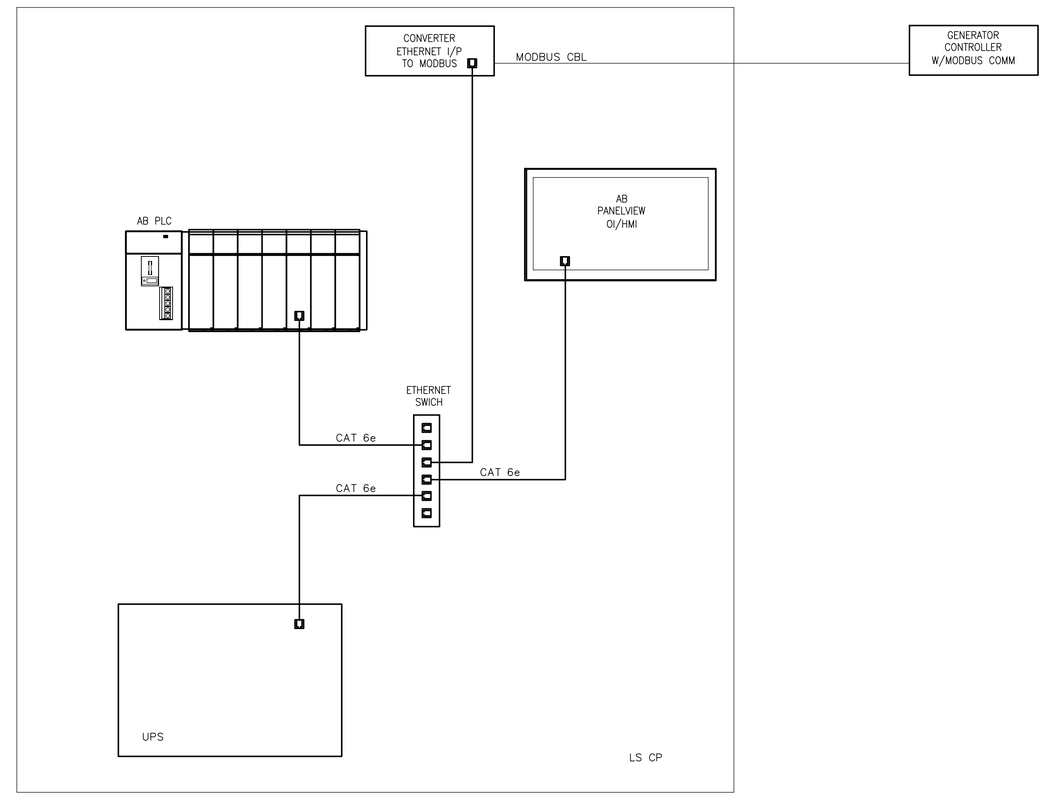

SIGNAL NETWORK DIAGRAM

NTS

C&W engineering
ELECTRICAL CONSULTANTS
2775 VISTA PARKWAY, SUITE G6
WEST PALM BEACH, FL. 33411
(561) 642-5333
REGISTRATION NUMBERS
C & W ENGINEERING INC. CA# 33315
MICHAEL A. GUIDA, P.E. 60755
58081

DATE	BY	REVISIONS

Date: 6/23/2020
Scale: AS NOTED
Design By: JLR
Drawn By: AOD
Check By: MAG

LOXAHATCHEE RIVER DISTRICT
LIFT STATION #82 REHABILITATION

I&C DETAILS

HOLTZ CONSULTING ENGINEERS, INC.
270 SOUTH CENTRAL BLVD., SUITE 207
JUPITER, FLORIDA 33458
PH. (561) 575-2005
Cert. No. 26960

MICHAEL A. GUIDA, P.E.
License No: 60755

I-5

Drawing Name: \\NUWSERVER-PC\Dropbox\JOBS\58-Holtz Consulting former (MA)\58081 ENCON LRD MLS 82\DRAWINGS\03 Electrical I&C.dwg Layout Name: I-5 – Plotted by: Andres Demarchi – Date: 10/5/2020 – 4:47 PM – Holtz Consulting Engineers